US006692255B2

(12) **United States Patent**
Roberts et al.

(10) **Patent No.: US 6,692,255 B2**
(45) **Date of Patent: Feb. 17, 2004**

(54) **APPARATUS AND METHOD UTILIZING BI-DIRECTIONAL RELATIVE MOVEMENT FOR REFRESHABLE TACTILE DISPLAY**

(75) Inventors: **John W. Roberts**, Damascus, MD (US); **Oliver T. Slattery**, Gaithersburg, MD (US); **David W. Kardos**, Columbia, MD (US); **Edwin Mulkens**, Gaithersburg, MD (US); **Bretton Swope**, Gaithersburg, MD (US)

(73) Assignee: **The United States of America**, Washington, DC (US)

(*) Notice: Subject to any disclaimer, the term of this patent is extended or adjusted under 35 U.S.C. 154(b) by 0 days.

(21) Appl. No.: **09/921,802**

(22) Filed: **Aug. 6, 2001**

(65) **Prior Publication Data**

US 2002/0045151 A1 Apr. 18, 2002

Related U.S. Application Data

(63) Continuation-in-part of application No. 09/572,048, filed on May 16, 2000.

(60) Provisional application No. 60/178,699, filed on Jan. 28, 2000, and provisional application No. 60/134,887, filed on May 19, 1999.

(51) **Int. Cl.**[7] **G09B 21/00**

(52) **U.S. Cl.** **434/113**

(58) **Field of Search** 434/112, 113, 434/114, 117, 173, 174, 182; 340/407.1, 825.19

(56) **References Cited**

U.S. PATENT DOCUMENTS

2,521,338	A	*	9/1950	Bryce	434/114
2,549,632	A	*	4/1951	Nottingham	434/114
3,624,772	A	*	11/1971	GRunwald	400/109.1
3,736,672	A	*	6/1973	Skewis et al.	434/114
4,500,293	A	*	2/1985	Eltgen	434/114
4,551,102	A	*	11/1985	Meinzer	434/114
4,650,352	A	*	3/1987	Eriksson	433/90
5,474,457	A	*	12/1995	Bromley	434/311
5,944,574	A	*	8/1999	Small et al.	446/149
6,109,922	A	*	8/2000	Litschel et al.	434/114
6,354,839	B1	*	3/2002	Schmidt et al.	434/113

* cited by examiner

Primary Examiner—Kurt Fernstrom
(74) *Attorney, Agent, or Firm*—Harold A. Burdick

(57) **ABSTRACT**

A refreshable Braille reader apparatus and method are disclosed, the apparatus preferably utilizing a rotating cylinder having endless rows of openings defined therethrough to a display surface with a pin held in each opening and freely movable therein. Static actuators at least equal in number to the rows of openings through the cylinder are maintained at a station adjacent to the surface of the cylinder, and are configured and positioned so that the pins are selectively contactable at either of their ends by different ones of the actuators during cylinder rotation in either forward or reverse direction thereby selectively positioning first ends of the pins relative to the surface of the cylinder to allow streaming of Braille text across a display area in either forward or backward order depending upon selected direction of cylinder rotation.

24 Claims, 6 Drawing Sheets

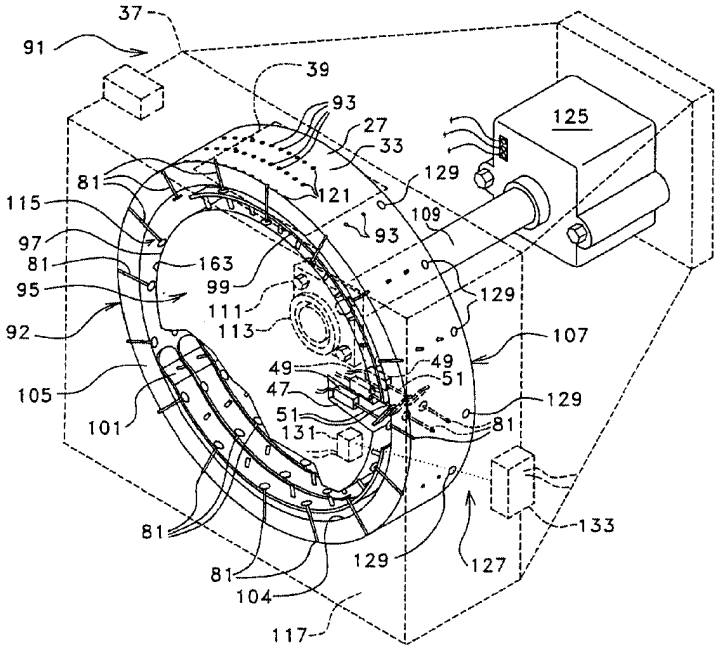

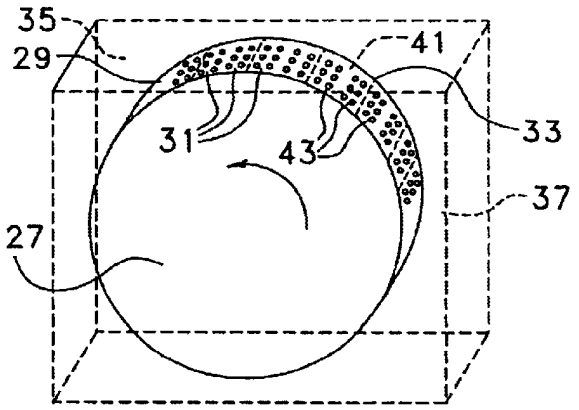

FIG. 1

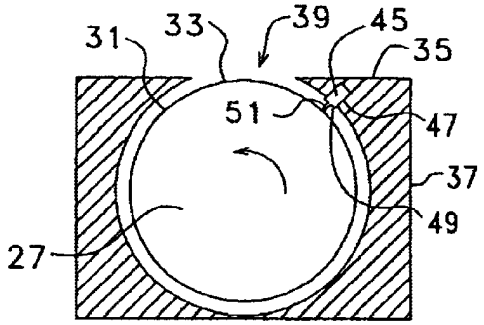

FIG. 2

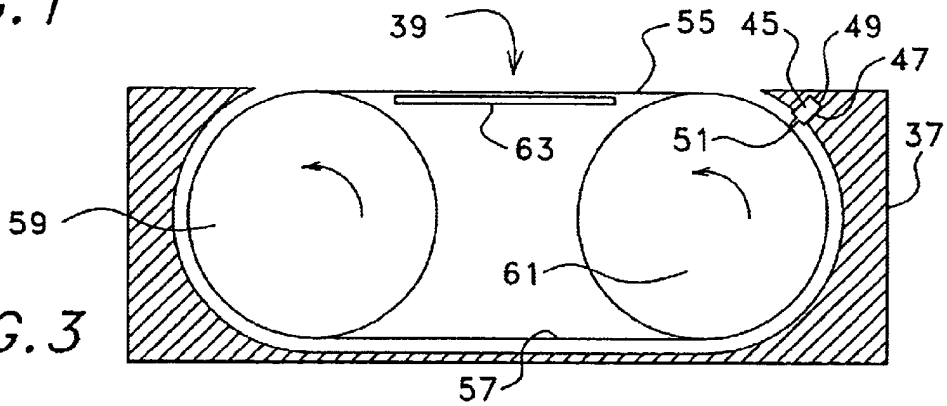

FIG. 3

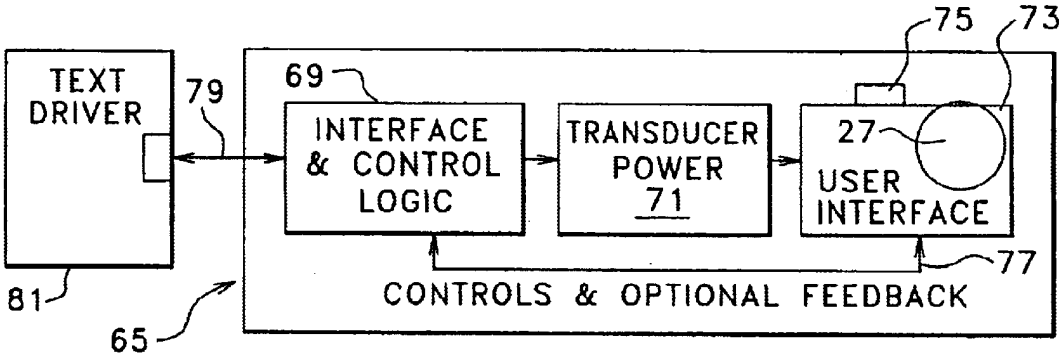

FIG. 4

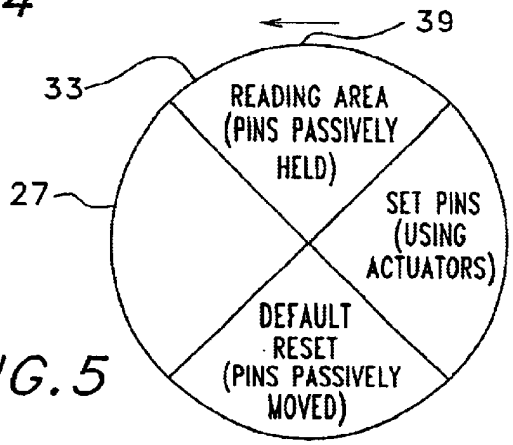

FIG. 5

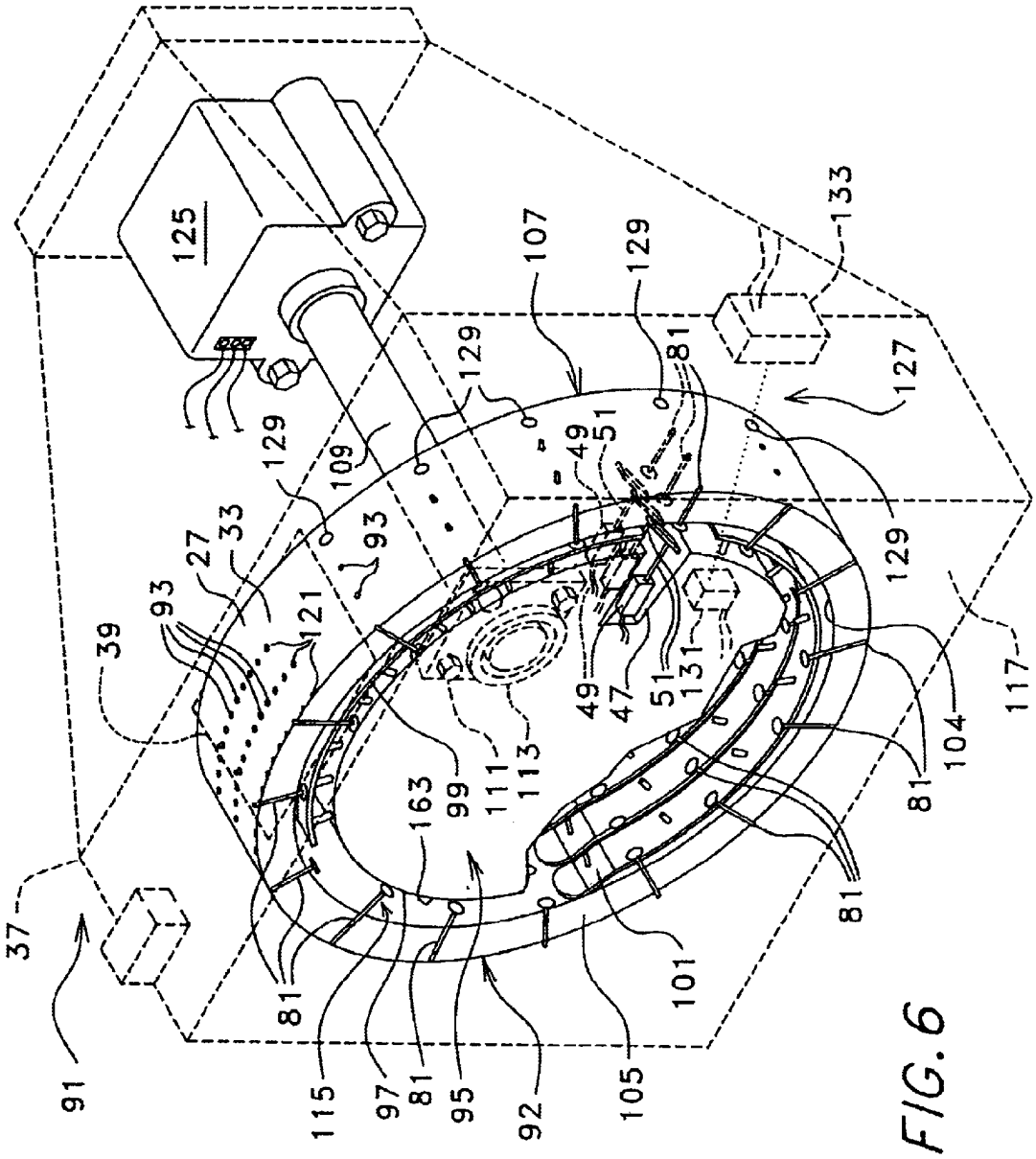
125
107
129
133
127
81
49
51
109
93
27
33
121
39
131
47
117
104
111
113
99
163
37
91
115
97
95
92
105
101

FIG. 6

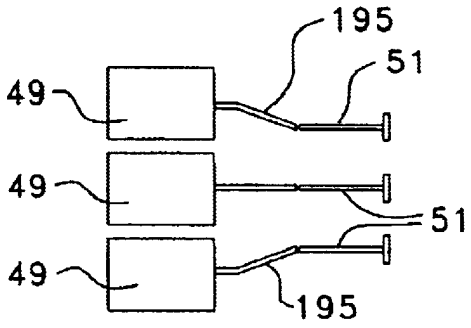

FIG. 20

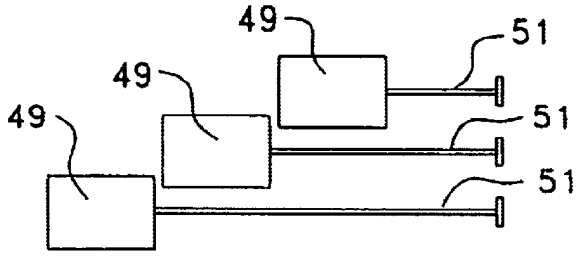

FIG. 21

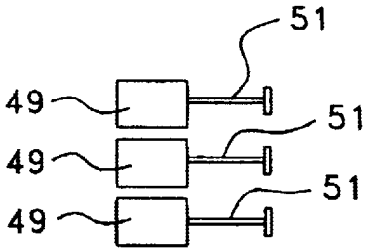

FIG. 7

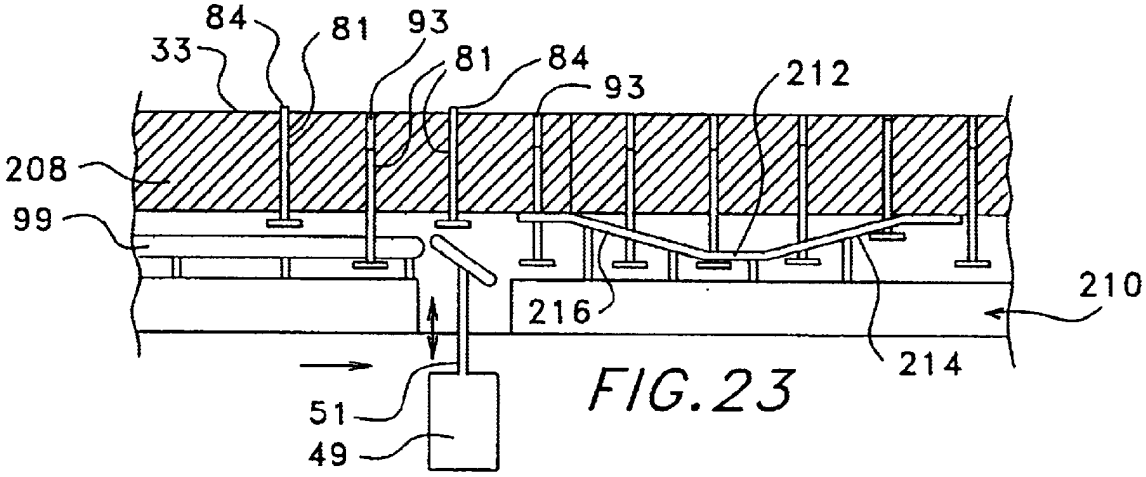

FIG. 23

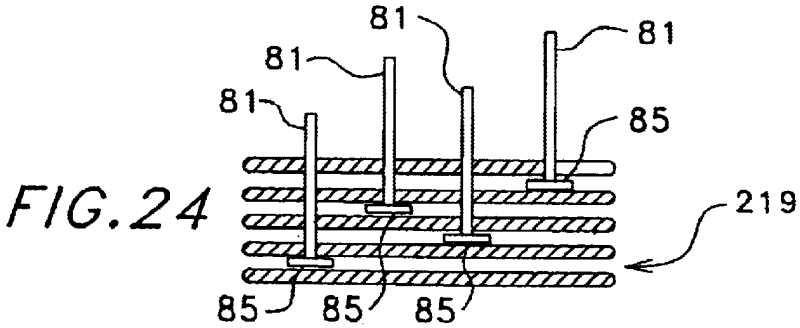

FIG. 24

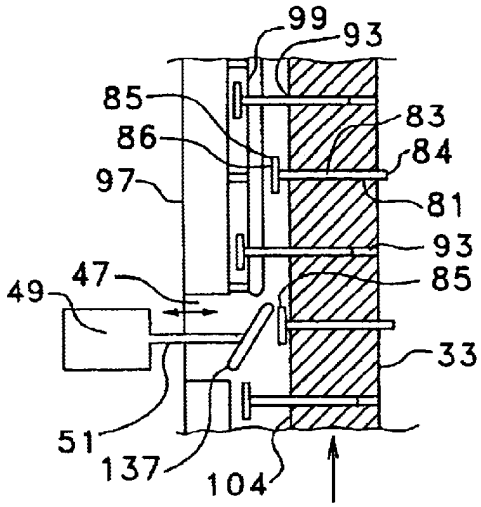

FIG. 8

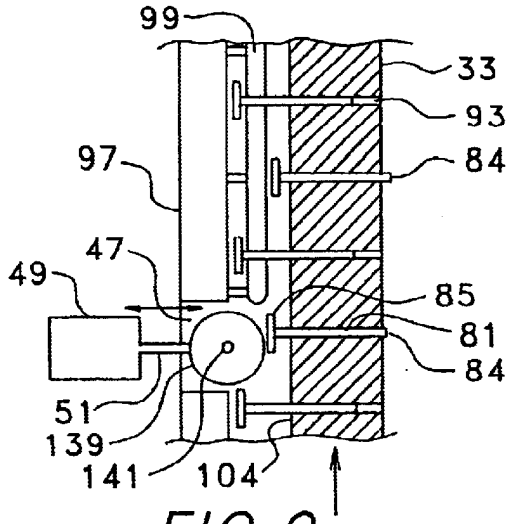

FIG. 9

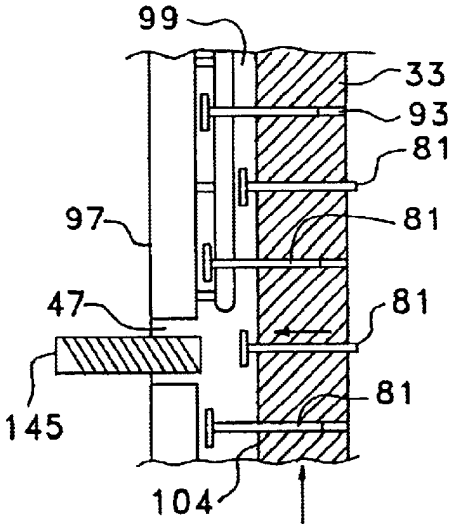

FIG. 10

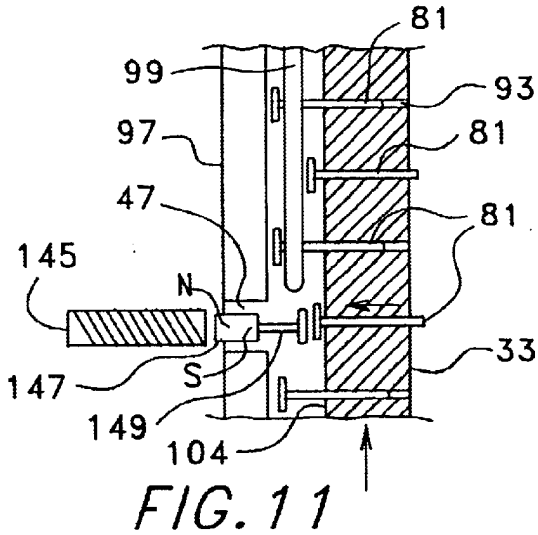

FIG. 11

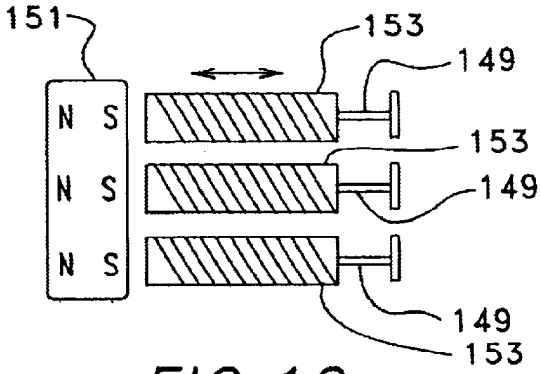

FIG. 12

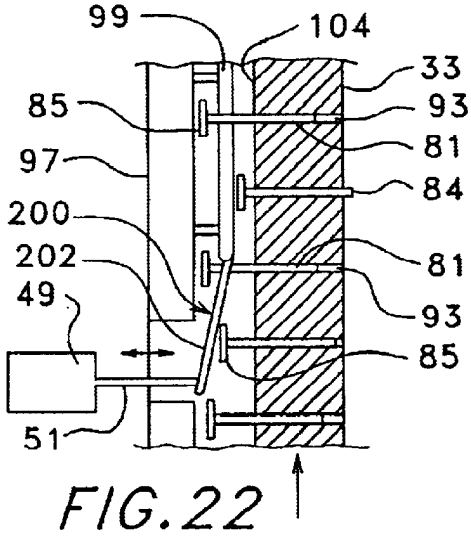

FIG. 22

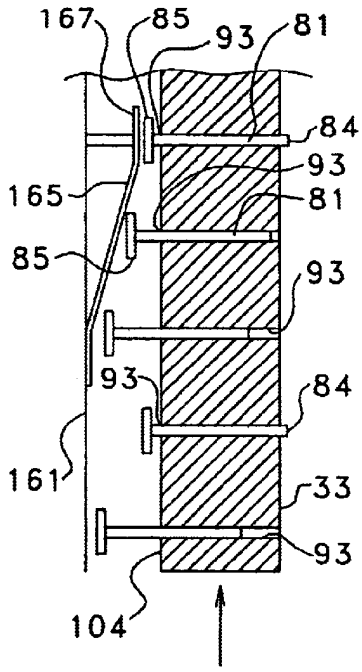

FIG. 13

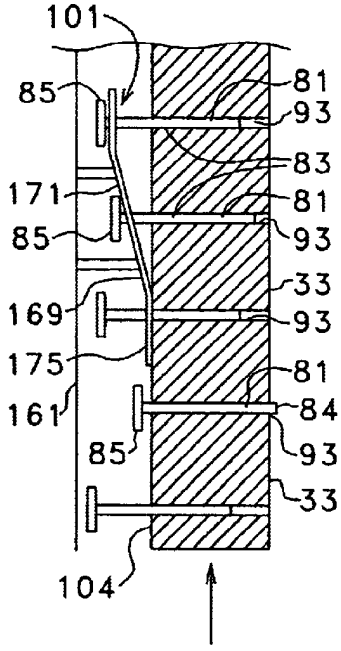

FIG. 14

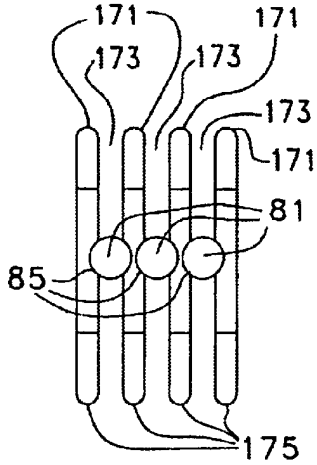

FIG. 15

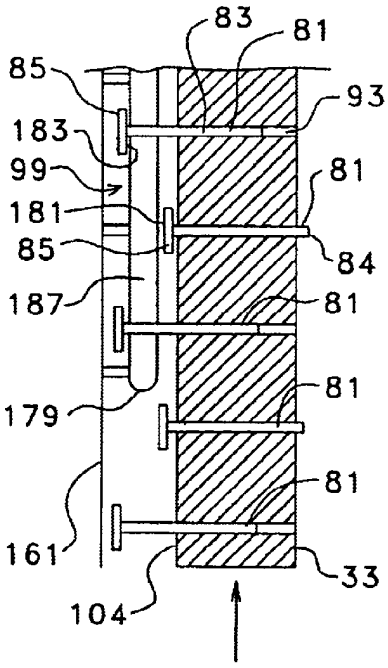

FIG. 16

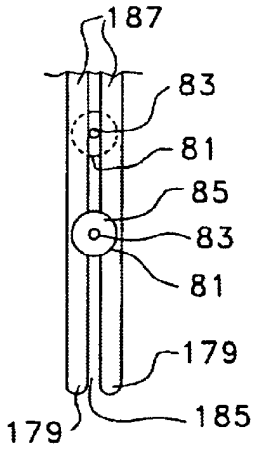

FIG. 17

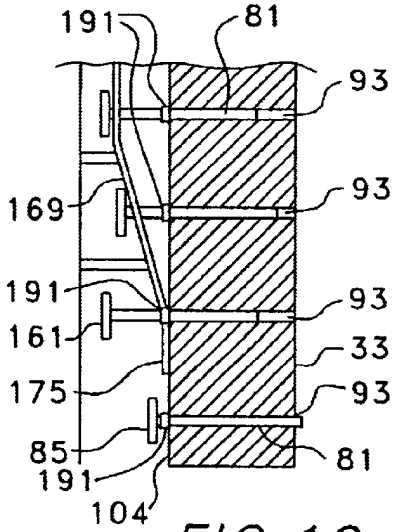

FIG. 19

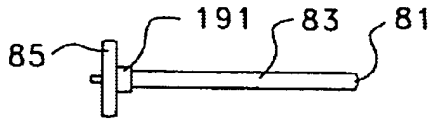

FIG. 18

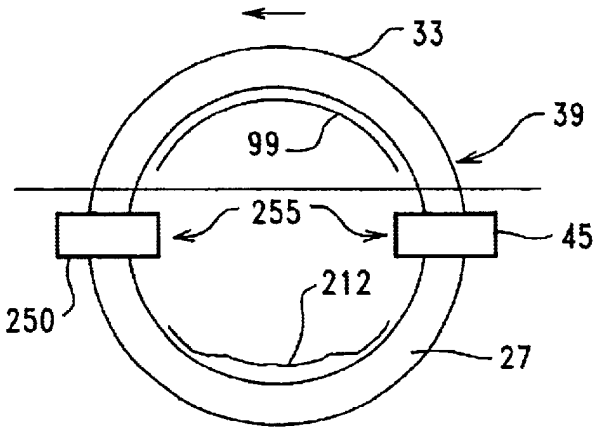

FIG. 25

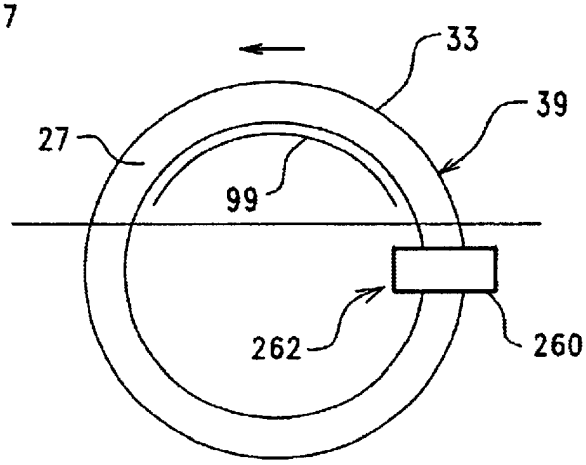

FIG. 26

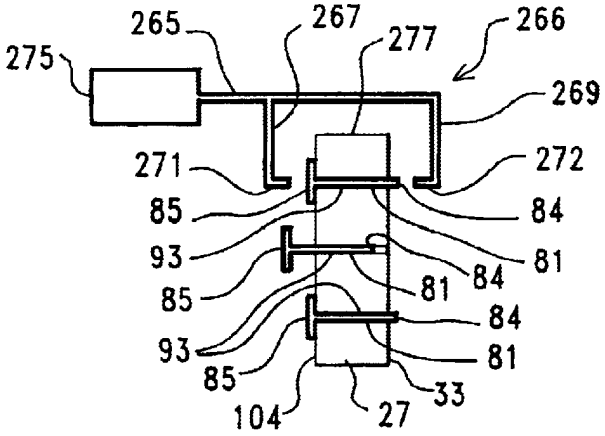

FIG. 27

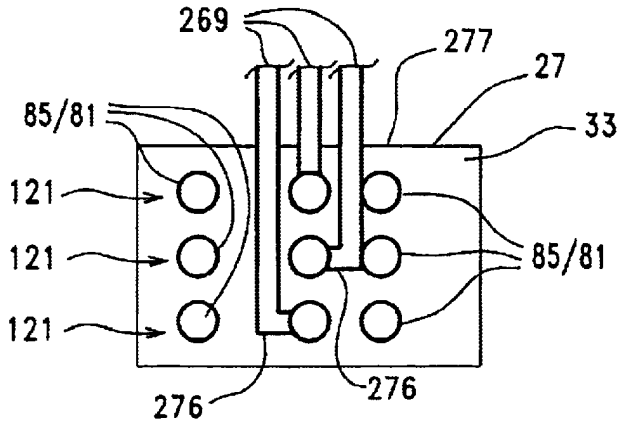

FIG. 28

APPARATUS AND METHOD UTILIZING BI-DIRECTIONAL RELATIVE MOVEMENT FOR REFRESHABLE TACTILE DISPLAY

RELATED U.S. APPLICATIONS

This application is a continuation-in-part of U.S. patent application Ser. No. 09/572,048 which is pending on the date of this application and which is entitled APPARATUS AND METHOD FOR REFRESHABLE TACTILE DISPLAY filed by inventors named herein on May 16, 2000 claiming the benefit of U.S. Provisional Patent Application No. 60/134,887, filed May 19, 1999, and U.S. Provisional Patent Application No. 60/178,699, filed Jan. 28, 2000.

FIELD OF THE INVENTION

This invention relates to tactile display devices and methods, and, more particularly, relates to such devices and methods wherein a tactile display is readily reconfigurable.

BACKGROUND OF THE INVENTION

One of the potential benefits of advances in computer and related technologies is the prospect for improved accessibility to information services for the handicapped, particularly electronically stored or transmitted information. For the blind and vision impaired, work has been done on improved accessibility by special adaptations to visual displays, by voice-based systems (voice output and in some cases voice input), and by touch-based devices. Each of these approaches is particularly useful for certain applications, and serves a certain part of the population of users.

The most common implementation for a touch-based computer-driven display is the refreshable Braille reader. This is a device which produces a pattern of raised dots in the six (or eight) dot cells that represent Braille characters (see U.S. Pat. Nos. 6,109,922 and 4,551,102, for example). Often, the dots are controlled by actuators (typically one per dot in each cell), and can be individually set to change the Braille characters being displayed on each Braille cell. Typically, a single line of Braille is made available, ranging from a relatively short line for a portable device, to 80 characters or more for a device built into a desktop keyboard. These devices produce a usable, refreshable Braille display, but suffer the drawbacks of extremely high cost and mechanical unreliability (due in large part to the great number of mechanical components). Cost and reliability issues have thus hindered the expanded use of Braille as a computer interface.

Some heretofore known full-scale Braille readers may contain hundreds of actuators. Since the traditional method of constructing a refreshable Braille display producing a linear array of Braille cells requires a separate actuator for every dot of every cell in the display, an 80 cell display of 8-dot Braille (per cell) would require 640 actuators. Actuators are the primary expense in traditional Braille displays, and also represent the most likely source of introduced unreliability into the system.

Other heretofore known systems rely on complex systems of magnets (electromagnets and permanent magnets) to move and retain Braille characters. Such systems have not always been found to produce reliable results and/or are expensive to manufacture given the need for specificity and isolation of the magnetic effects from one Braille dot to the next.

Improvement in such devices producing computer-refreshable Braille text for tactile reading by the blind and visually impaired could thus be utilized thereby broadening accessibility to computer services such as electronic books, e-mail and other network access, and general computer use. Improvements in cost and mechanical reliability must be attained in order to facilitate more widespread use of refreshable Braille devices. Mechanical simplicity over existing refreshable Braille devices, while providing much of their functionality as well as additional features, would be desirable for users while greatly lowering cost and improving reliability in comparison to existing systems. Moreover, such systems should be easily reversible and searchable (forward and back) so that a user may review Braille text as necessary and desired by the user.

SUMMARY OF THE INVENTION

This invention provides apparatus and methods for producing refreshable tactile display, in particular refreshable Braille text that can be streamed at a display surface in either forward or backward order by utilizing bi-directional relative movement of components of the apparatus. The apparatus can be produced at a great reduction in cost of manufacture over heretofore known devices while yet realizing greatly increased mechanical reliability and simplicity.

The refreshable Braille reader broadly includes a display assembly having an outer surface with a plurality of openings therethrough, the openings arranged in rows. Pins are mounted in the openings and are movable therein.

The actuating means preferably includes at least a first actuator assembly having actuators at least equal in number to number of the rows of openings in the display assembly surface. Each actuator includes a driver, a shaft selectively extendible and retractable by the driver and first and second contact tips at the shaft. The actuators are positioned so that the first contact tip can selectively contact the first ends of the pins and the second contact tip can selectively contact the opposite ends of the pins.

The actuating means preferably includes at least a first actuator assembly having actuators at least equal in number to number of the rows of openings in the display assembly surface. Each the actuator includes a driver, a shaft selectively extendible and retractable by the driver and first and second contact tips at the shaft. The actuators are positioned so that the first contact tip can selectively contact the first ends of the pins and the second contact tip can selectively contact the opposite ends of the pins.

In the now preferred embodiment of the refreshable Braille reader, a cylinder connected with a motor for rotation thereof in either of two directions is utilized. The cylinder has a cylindrical outer surface a part of which defines a tactile display area and a cylindrical inner surface, the openings extending between the surfaces.

The actuators are statically positioned, are at least equal in number to the rows of openings through the cylinder, and are configured so that the pins are selectively contactable at either of their ends by different ones of the actuators during cylinder rotation in either of the two directions, thereby streaming Braille text across the display area in either forward or backward order depending upon selected direction of cylinder rotation. Controls are provided allowing user selection at least of direction of rotation of the cylinder.

In one embodiment first and second sets of actuators, each set having actuators at least equal in number to number of the rows of the openings, are provided, the first actuator set positioned at one side of the tactile display area and the second actuator set positioned at an opposite side of the tactile display area. The first actuator set selectively causes

controlled pin movement in the openings for steaming Braille text in the forward order and the second actuator set causes controlled pin movement in the openings for streaming Braille text in the backward order.

The method for streaming Braille text in either forward or backward order at a display area of this invention includes the steps of effecting relative movement in either of two directions between a station and a display surface and selectively activating actuators at the station while effecting the relative movement in a first of the two directions to set pins at selected positions relative to the display surface by contact with the pins. Relative movement in either the first or a second of the two directions is continually effected to selectively reset the pins at selected positions relative to the display surface by selectively activating the actuators at the station to cause contact with the pins.

The implementation of the apparatus of this invention embodied for streaming of Braille text at a display surface and characterized as a rotating cylinder refreshable Braille reader would produce computer-refreshable Braille text for tactile reading by the blind and visually impaired. This implementation will improve accessibility to computer services such as electronic books, e-mail and other network access, and general computer use. The apparatus is designed to be mechanically simpler than existing refreshable Braille reader devices, while providing much of their functionality as well as additional features. The design of this apparatus allows for greatly lowered cost and improved reliability in comparison to existing systems and can be implemented in such a way as to provide refreshable Braille text to the user from a typical reading rate of 60 to 125 words per minute up to a high reading rate of 250 words per minute and in either forward or backward text streams (i.e., forward or reverse cylinder rotation).

The rotating cylinder refreshable Braille reader of this invention addresses cost and reliability issues of heretofore known systems by greatly reducing the number of actuators utilized to set Braille text at a reading surface, from hundreds in heretofore known implementations, to as few as three or four (though as many as sixteen may be desirable) depending on the particular configuration. Instead of a static linear array of Braille cells that the user reads by moving one or more fingers along the line, the rotatable wheel Braille reader herein disclosed sets the Braille dots on the surface of a wheel or disk, which rotates under the user's finger, giving the user the sensation of a line of static Braille text moving under the user's finger. The Braille text on the wheel is refreshed as the wheel rotates, either in a repeating pattern around the wheel, or (using actuators internal or external to the wheel) at a specific point in the rotation of the wheel, setting a pattern of Braille dots on the wheel that are passively retained until they have passed under the reader's finger, after which they may be erased and then rewritten in the next rotation.

The preferred embodiments of the reader apparatus of this invention use a passive pin displacement approach, which can be used as the basis for either an external or internal actuator stationed refreshable Braille display. It can also be adapted to a linear Braille display, to certain types of tactile graphic displays, and may be applicable for non-accessibility application. Multiple Braille cells (potentially a large number) may be deployed displaying a valid text stream to the user. Improved control, precision, reliability of the device, greater versatility of operation, rapid display, long useful service life for the device, and extremely low cost of manufacture compared to now known systems will be achieved. The apparatus of this invention also utilizes means for replacing substantially continuously powered actuators with passive position retention, thereby greatly lowering the cost of manufacture and operation of a Braille display in a robust and mechanically simple manner.

It is therefore an object of this invention to provide improved apparatus and methods for producing a refreshable tactile display.

It is another object of this invention to provide apparatus and methods for streaming a tactile display at a display area.

It is another object of this invention to provide apparatus and methods for producing refreshable Braille text that can be streamed at a display surface in either forward or backward order by utilizing bi-directional relative movement of components of the apparatus.

It is another object of this invention to provide improved tactile display apparatus producing computer-refreshable Braille text for reading by the blind and visually impaired to improve access to computer services such as electronic books, e-mail and other network access, and general computer use.

It is still another object of this invention to provide a refreshable Braille reader apparatus that is mechanically simple and reliable, compact, lower in cost, fast, and that provides improved control, precision, and versatility of operation including providing either forward or backward text streaming capability.

It is another object of this invention to provide a refreshable Braille reader including a display assembly having an outer surface, the surface having a plurality of openings therethrough with the openings arranged at the surface in rows, a plurality of pins having first and second ends, each one of the pins mounted in a different one of the openings and movable therein, and actuating means maintained at a station adjacent to the surface of the display assembly for moving the pins, the pins selectively contactable by the actuating means to move the pins in the openings so that the first ends of the pins are selectively raised from or not raised from the surface, at least one of the actuating means and the display assembly being movable relative to the other of the actuating means and the display assembly in either of two directions, the actuating means capable of causing controlled pin movement in the openings while relative movement occurs in either of the two directions.

It is still another object of this invention to provide a refreshable Braille reader including a cylinder connected with a motor for rotation thereof in either of two directions, the cylinder having a cylindrical outer surface a part of which defines a tactile display area and a cylindrical inner surface, the cylinder having a plurality of openings therethrough between the surfaces, the openings arranged in at least three endless rows, a plurality of pins having first and second ends, each one of the pins mounted in a different one of the openings and movable therein, static actuators at least equal in number to the rows of openings through the cylinder maintained at a station adjacent to the cylinder, the actuators positioned and configured so that the pins are selectively contactable at either of the ends by different ones of the actuators during cylinder rotation in either of the two directions so that the first ends of the pins are selectively positioned relative to the outer surface of the cylinder thereby streaming Braille text across the display area in either forward or backward order depending upon selected direction of cylinder rotation, and user controls allowing control at least of direction of rotation of the cylinder.

It is yet another object of this invention to provide a method for streaming Braille text in either forward or

backward order at a display area including the steps of effecting relative movement in either of two directions between a station and a display surface, selectively activating actuators at the station while effecting the relative movement in a first of the two directions to set pins at selected positions relative to the display surface by contact with the pins, and effecting relative movement in either the first or a second of the two directions to selectively reset the pins at selected positions relative to the display surface by selectively activating the actuators at the station to cause contact with the pins.

With these and other objects in view, which will become apparent to one skilled in the art as the description proceeds, this invention resides in the novel construction, combination, arrangement of parts and method substantially as hereinafter described, and more particularly defined by the appended claims, it being understood that changes in the precise embodiment of the herein disclosed invention are meant to be included as come within the scope of the claims.

BRIEF DESCRIPTION OF THE DRAWINGS

The accompanying drawings illustrate a complete embodiment of the invention according to the best mode so far devised for the practical application of the principles thereof, and in which:

FIG. **1** is simplified illustration of an apparatus in accord with this invention;

FIG. **2** is simplified illustration of another apparatus in accord with this invention;

FIG. **3** is simplified illustration of yet another apparatus in accord with this invention;

FIG. **4** is a block diagram of implementation of the tactile display apparatus in accord with this invention;

FIG. **5** is a process flow diagram of a preferred embodiment of the tactile display apparatus of this invention;

FIG. **6** is a simplified illustration of a preferred embodiment of one display apparatus of this invention, with portions illustrated representationally and/or cut away and/or exaggerated for better illustration of the principles thereof;

FIG. **7** is a simplified illustration of an actuator grouping usable in the apparatus of FIG. **6**;

FIG. **8** is a simplified illustration of an actuator embodiment usable in the apparatus of FIG. **6**;

FIG. **9** is a simplified illustration of another actuator embodiment usable in the apparatus of FIG. **6**;

FIG. **10** is a simplified illustration of another actuator embodiment usable in the apparatus of FIG. **6**;

FIG. **11** is a simplified illustration of yet another actuator embodiment usable in the apparatus of FIG. **6**;

FIG. **12** is a simplified illustration of yet another actuator embodiment usable in the apparatus of FIG. **6**;

FIG. **13** is a simplified illustration of a passive default positioning device usable with the apparatus of FIG. **2**;

FIG. **14** is a simplified illustration of a passive default positioning device usable with the apparatus of FIG. **6**;

FIG. **15** is top view of the default positioning device of FIG. **14**;

FIG. **16** is a simplified illustration of a position retaining device usable with the apparatus of this invention;

FIG. **17** is partial bottom view of the retaining device of FIG. **16**;

FIG. **18** is a side view of an alternative pin design usable with the apparatus of this invention;

FIG. **19** is a simplified illustration of an alternative pin/aperture arrangement usable with the apparatus of this invention;

FIG. **20** is a simplified illustration of an actuator grouping implementation usable with the apparatus of FIG. **6**;

FIG. **21** is a simplified illustration of another actuator grouping implementation usable with the apparatus of FIG. **6**;

FIG. **22** is a simplified illustration of a combination actuator/position retention device alternatively usable with the apparatus of FIG. **6**;

FIG. **23** is a simplified illustration of a linear tactile display apparatus in accord with this invention;

FIG. **24** is a simplified illustration of a position retaining device used to retain multiple pin elevations in apparatus of this invention;

FIG. **25** is a simplified diagrammatic illustration showing a first embodiment of a bi-directional implementation of the apparatus of this invention;

FIG. **26** is a simplified diagrammatic illustration showing a second embodiment of a bi-directional implementation of the apparatus of this invention;

FIG. **27** is a simplified diagrammatic illustration showing an actuator for an actuator grouping implementation usable with the apparatus of FIG. **27**; and

FIG. **28** is a simplified diagrammatic illustration showing an offset arrangement for an actuator assembly as shown in FIG. **27**.

DESCRIPTION OF THE INVENTION

The most common method of reading Braille is to slide one or more fingertips across a line of Braille characters, relative motion of the Braille text and the fingertip being necessary for the sensation of touch that permits the most efficient reading of Braille. The user may tend to skip quickly over "expected" characters, and occasionally to backtrack to re-read or confirm some characters. Reading is usually on a word by word basis.

In its most general terms as shown in FIG. **1**, the preferred embodiment of the invention described herein replaces a line of refreshable Braille characters with a rotatable assembly streaming text across a reading area, for example (in one embodiment) including a wheel or cylinder **27**. Wheel **27** (a cylinder, disk or the like) has an outer rim with height at its outer edge (or face) **29** at least equal to the height of a Braille character, with refreshable Braille characters definable at a selected surface characteristic **31** at tactile display surface **33** along outer edge **29** of the wheel **27** (around the cylinder face) and rotatable about the axis of the cylinder.

Wheel **27** is recessed into surface **35** of housing **37** so that only a small portion of the cylinder (for example, the width of two Braille characters) is exposed above surface **35** at a display area (or reading aperture) **39** (see FIG. **2**). The user places a finger on the exposed surface of the wheel. Instead of the user sliding a finger along a motionless line of Braille characters, the rotation of the wheel causes the Braille characters to slide (or stream) past the finger, allowing them to be read.

With the primary objectives of this design in mind (to create a Braille reader with greater mechanical simplicity and reliability and at a lower cost than existing Braille readers), several alternative embodiments for implementation of the objectives are realized.

Actuators may be placed within cylinder **27** or along a shaft on which the cylinder rotates. Braille cells **41** are

organized in sets of two characters **43**, with an even number of characters around cylinder **27**. Aperture **39** through which the user feels the Braille characters on display surface **33** of cylinder **27** is preferably of a width to allow no more than two characters to be felt at one time. With a six-dot Braille code, up to twelve actuators are used to control two character cells (depending upon design choice). For eight-dot code, up to sixteen actuators are used. At any given instant, all two character cell pairs around cylinder **27** are displaying the same pattern. Therefore, only twelve actuators are needed to control all cells **41** on cylinder **27**, with the motion from each actuator distributed to the corresponding Braille dot mechanism in all cells. The actuators are controlled by a computational device so that what the user feels through aperture **39** is a string of Braille characters. The actuators must therefore be fast enough to change the pattern of dots on a serial basis to provide the desired reading speed.

The method of distribution of actuator activity to its multiple corresponding dots may be by flexible cable directed through a channel, by solid linkages, or by a combination of the two. The greater the number of cells (character pairs) on cylinder **27**, the flatter reading surface **33** will seem to the user, but such an increase will also increase the size of the device, and the force the twelve actuators must provide to operate all the cells. The number of cells on cylinder **27** will be set by a design compromise of these factors.

As illustrated in FIG. **2**, in an embodiment employing external actuator assembly **45** statically positioned at a station **47** of housing **37**, cylinder **27** contains no active components. The pattern of dots making up Braille characters is set in cooperation with surface characteristic **31** of cylinder **27** by external actuators **49** in assembly **45** (only one shown) before they move into reading aperture **39** for detection by the user. In this embodiment, six dots (for six-dot Braille code, arranged in two columns of three dots each) form each Braille cell (i.e., one character in six-dot Braille), and dots are arranged around display surface **33** in three endless rows (see FIG. **1** for an example of this arrangement of rows, it being understood that for eight-dot Braille code eight dots arranged in two columns of four dots each form a cell, there being four endless rows arranged around display surface **33**). This allows the reader apparatus of this invention to operate with as few as three actuators **49** in the assembly creating a stream of Braille characters at reading aperture **39** as relative motion between surface **33** and actuator station **47** (in a direction substantially parallel to one another) continues. This represents a substantial reduction compared to the hundreds of actuators that may be required for existing readers (a slight increase in the number, for example to six actuators, may allow slower actuators to be used, by splitting the task of setting the dots).

There are several ways by which the Braille dots may be formed at display surface **33** (i.e., defining a selected surface characteristic **31**) of cylinder **27** by actuators **49**. The individual dots may be defined by numerous (one for each dot) spring-loaded push-on, push-off pin devices mounted in openings (corresponding to the dots) in cylinder **27** such as are used in certain push-button switches or in retractable ball-point pens. A push from an actuator shaft **51** causes an individual pin to switch state, from "in" (not extended from the cylinder surface) to "out" (extended from the cylinder surface), or vice versa. The controlling device preferably keeps track of the status of every dot in every cell on the cylinder, and when refreshing the text either reverses the status of dots or allows them to remain unchanged on a dot-by-dot basis, according to the requirements of the new text (though refreshing could occur merely by returning all pins to a default state after reading, for example the unextended position, by mechanical means before resetting by actuators **49** as discussed hereinafter).

Other passive mechanical means of forming the dots could be utilized. For example, pins shaped as small cylinders or spheres which are flattened on one side and which can be rotated about individual axes in openings in the cylinder by the actuators could be utilized. The cylinders or spheres would be shaped and contained so that rotation while passing across the user reading area and when being contacted by the user's fingers is prevented.

In yet another embodiment, the selected surface characteristic **31** of cylinder **27** can be a mechanically plastic material covering outer surface **33** of cylinder **27** and into which actuators **49** press a pattern of Braille text characters as it moves past, and which is capable of such character retention through reading area (or aperture) **39**. After passing reading area **39**, rollers or similar such devices are provided to flatten (and thus reshape so that no impressions remain) the surface of the plastic material, thereby providing a blank, unwritten, surface **33** for new text to be written. The plastic material must be sufficiently stiff to permit reading without undue deformation of the material, but sufficiently pliable to permit writing, flattening, and rewriting.

In still another embodiment, shown in FIG. **3**, the Braille dots are externally set in a mechanically plastic material as described above with respect to FIG. **2**, but instead of being set on surface **33** of wheel **27**, they are set on surface **55** of belt **57** moving around two wheels **59** and **61**. Instead of one or two characters being exposed at any given time at reading aperture **39**, several characters, up to an entire line of Braille text, are exposed. Back plate **63** keeps belt **57** from flexing while the user reads the Braille at reading aperture **39**. This method sacrifices some simplicity for the ability to display an entire line at a time.

The user may choose to operate such a display in any of several different modes. The display can be configured to update continuously and with wheels **59**/**61** rotating continuously. The user places a finger where the text first appears, and stops the motion of the display in order to re-read characters that have just moved past the finger. Alternatively (depending upon reading aperture size), the display can be configured to update an entire line at a time, and is then stopped while the user reads the entire line. When deploying the display apparatus of this invention in this mode, belt **39** can be made wider, and more actuators **49** can be added, so more than one line can be displayed at a time if desired. With a sufficiently long line of actuators and a sufficiently wide belt, an entire page of Braille text can be updated and displayed at once.

Moreover, where a multiple-line extended Braille text display is desired, separate belts **57** (and drive wheels **59**/**61**) may be provided for each line of text. This would allow for utilization of much slower actuators **49**. While the user is reading one line, other lines are slowly being updated. Satisfactory throughput can be provided even if the individual actuator groups in assembly **45** (triads, for example, for six-dot Braille) produce Braille text at a fraction of the user's reading speed.

FIG. **4** shows an example of one method of implementation of refreshable Braille reader **65** in accord with the various embodiments of this invention. This implementation includes interface and control logic **69**, power electronics **71** to drive the transducers (actuators) and rotation of Braille wheel **27**, and physical user interface **73**. The physical user

interface includes Braille wheel **27** and additional controls **75** such as stop, start, forward and reverse buttons and a speed control for adjustment of the speed of rotation of Braille wheel **27** to provide a desired reading rate.

In addition to signals from user controls **75**, feedback path **77** may include signals from sensors (discussed herein below) that observe the performance of Braille wheel **27**, in order to detect any errors and/or to tune performance. A standard port interface **79** (which may be a parallel port, serial port, USB, or infrared link, for example) connects reader **65** to text driver device **81** such as an electronic book reader, a PDA, or a notebook or desktop computer. Text driver device **81** is programmed to provide the signals needed by Braille reader **65** over port connection **79** to control logic **69**.

It is the responsibility of the control system to produce the appropriate Braille text and to respond to user input. The commands the user may wish to send to reader **65** at controls **75** include those which are typical of an electronic book reader (move forward, move back, bookmark, dictionary and the like), and commands which are specific to the motion-based Braille reader of this invention. The latter class of commands may include start/stop, speed adjustment and repeat (play back of words to clarify an uncertainty or search for data). A display protocol may be implemented to aid identification of changes in context, as when the user jumps to a different location in text or looks up a reference. One example of such a protocol includes a separator (a brief blank interval, for example) whereby cylinder **27** rotates but nothing is displayed.

Adjustment of the speed of rotation of Braille wheel **27** (and thus the rate at which text is displayed) must be provided for adaptation to different users, and also for adjustment by a particular user for different applications (reading for entertainment, reading for study, and the like). A typical expert reading rate for Braille may be considered as 125 words per minute, which translates to roughly 32 Braille characters per second generated, and 20 cm/s motion of wheel surface **33** at display aperture **39**. A very fast reading rate would be considered 250 words per minute. Ability to produce text at the desired reading rate range defines the performance requirements for transducers **49** to be used to produce the Braille characters.

Turning now to FIGS. **5** and **6**, a passive pin displacement system for use with either an internal or an external (FIG. **2**) actuator reader design is illustrated. Unlike other methods in which Braille dots are mechanically deformed in order to store their binary status (raised dot or no dot) after writing, this system employs, as the selected surface characteristic **31** of wheel **27**, pins that are mechanically simple and passively manipulated or retained in position by the physical structures they encounter during the course of rotation of wheel **27**. Active control is used only at the point where the actuators set the text on wheel **27** by manipulation of the pins.

Referring to FIG. **5**, a collection of actuators (typically three for six-dot Braille or four for eight-dot Braille) set the positions of the pins described hereinafter (raised or lowered relative to reading/display surface **33**) one column at a time, for each of the three or four endless rows of dots (one actuator acting in each row). A Braille cell contains two columns of three or four dots, so two write operations are required to write each Braille cell.

After the Braille dots are written, they immediately move into contact with a physical structure that they slide along as the wheel rotates, the structure holding the pins in whatever position they are set by the actuators (either raised or lowered). This structure underlies the entire reading area **39** of the display aperture, where the user may place one or more fingers to feel the Braille dots formed by relative position of pin ends and surface **33**. The structure holds the Braille dots firmly in their relative position on wheel **27**, preserving readable Braille text. At some point after the dots on a given area of wheel **27** rotate out of reading aperture **39**, they come in contact with another physical structure that forces all the pins to a default position, after which the pins rotate back to the writing area (pin setting station **47**), where either the actuators are activated to shift the dots into the non-default position, or the actuators are not activated, allowing the corresponding dots to remain in the default position.

The default position may be either all pins raised from surface **33** (for external actuators) or all pins lowered from surface **33** (for internal actuators), the actuators thus being responsible for shifting selected pins to achieve the selected position of pin ends relative to reading surface **33** and reading aperture **39** (raised or lowered) to define the dots creating Braille characters. Utilizing the apparatus of FIG. **6** (default position with all pins lowered) provides the benefit of not requiring actuator function for spaces and the like, any actuator sound the user may hear thus being associated with active production of text.

The dots are formed by pins **81** that are mechanically quite simple (see FIGS. **6** and **8**, for example). Pins **81** are generally nail-shaped including a round shaft **83** with a rounded tip at one end **84** and enlarged head **85** (typically circular, for simplified mechanical behavior) at the other end **86**, head **85** having rounded edges. Rounded tips **84** of shaft **83**, when pins **81** are in the raised position, represents the Braille dot the user feels. Head **85** is the means by which the positions of pins **81** are controlled. Such pins are mechanically sturdy and reliable and inexpensive to manufacture.

FIG. **6** illustrates embodiment **91** or the apparatus of this invention configured for application of selected devices illustrated in FIGS. **7** through **22** in a wheel-based streaming Braille display utilizing an internal actuator design (it should be understood that FIG. **6** is for purposes of illustration only, a usable Braille display having many more pins more closely spaced). The outer ring represents rotatable assembly **92** including rotating wheel **27** in which pins **81** are slideably maintained in openings **93** therethrough to reading surface **33** thereat. The inner ring represents non-rotating (static) actuator assembly **95** and includes structure **97** for mounting of actuators **49** (also represented in a linear array in FIG. **7**), passive pin retention device **99** and passive default positioning device **101**. As wheel **27** rotates, pins **81** are set in position by the actuators **49** at station **47** of structure **97**, held in place by the passive retention device (or devices) **99** as the tactile display at surface **33** is streamed through reading area aperture **39** of housing **37**, and then returned to a default position (lowered, or retracted from surface **33**, in the FIGURE) by passive positioning device **101** to repeat the cycle. Passive retention can be extended any selected distance beyond reading aperture **39**. It should be realized that pins **81** could be left in their set position thereafter, thus eliminating the need for passive positioning device **101** to return pins **81** to a default position, employing, for example, bi-directional actuators. Actuator positioning closer to reading area aperture **39** will result in quicker response to user commands since it will take less time for pin position changes implemented at actuators **49** to rotate into the reading area.

Diameter of rotating wheel **27** in a particular embodiment is based on a number of factors. A smaller wheel is more

compact (allowing for a smaller package for the entire display) and requires fewer parts (fewer pins 81, for example). A larger wheel allows the reading area of surface **33** at aperture **39** to be less curved, allows more Braille cells to be displayed simultaneously at the reading area (which may be of particular value to users who read Braille with multiple fingers) permitting rapid re-reading of a Braille word before the word moves out of reading area aperture **39**. A larger wheel **27** will also exhibit slower wear (and thus longer useful life) since, as wheel size increases, individual pins **81** are cycled fewer times for a given amount of text displayed. The diameter of the wheel is preferably chosen so that an integer number of regulation size Braille (six- or eight-dot) cells with regulation spacing between cells can be precisely fit around the diameter of the wheel. Alternatively, having a noticeable discontinuity at one point on the surface of the wheel logically divides the displayed text into "lines", which a user of linear displays is accustomed to. In such an approach, it is desirable to select a wheel diameter so that the total cell count is some number familiar to readers, such as 40 or 80.

To implement a wheel-based display having an outer rotating assembly **92** and an inner non-rotating assembly **95**, wheel **27** of assembly **92** includes outer ring (or rim) **105** mounted on disk **107**, with shaft **109** controlling rotation centered through and attached by flange **111** with the face of disk **107** opposite the face on which the outer ring is mounted (shaft **109** being journalled for stabilizing rotation at journal **113** defined in structure **97** of assembly **95**). Rotating wheel **27** of assembly **92** is thus cup shaped, with open end **115** of the cup having non-rotating assembly **95** concentrically maintained therein (for example, by securing structure **97** to front wall **117** of housing **37**). The non-rotating components are installed at assembly structure **97** utilizing any known methods that provide satisfactory stability, and are precisely positioned within rotating outer rim **105** at their desired positions with respect to inner surface **104** of rotating outer rim **105** and thus pins **81**.

Braille cells have either three or four rows of dots (for six-dot or eight-dot Braille, respectively). Thus the display will need three or four rings (endless rows **121**) of axially arrayed pins **81**, all rings of pins rotating together about the same axis. Each row **121** has its corresponding actuator **49**, so either three or four actuators **49** are mounted adjacent to one another at station **47** of non-rotating assembly **95** at the interior of wheel **27**, each adjacent to a corresponding row **121** of openings **93**.

For both wheel-based and linear displays (discussed below with reference to FIG. **23**), it is important that the timing of actuators **49** correspond closely with the position of pins **81** at station **47**. If motion is controlled by stepper motor **125**, for example, control logic **69** (see FIG. **4**) can keep count of the motor pulses to keep track of the relative position of pins **81** and actuators **49**. However, given the challenge of selecting the correct initial pulse from which to start counting, and the risks associated with a failed motor action (causing the system to get out of step), a position registration system **127** (for example, periodic bumps or holes **129** in wheel **27** of the display apparatus through which light from source **131** shines on optical detector **133**) should be provided to send information to control logic module **69** constituting positive feedback on the relative position of the pin array and actuators **49**.

As shown in FIG. **8**, a first embodiment of an actuator **49** of the solenoid type for active selective positioning of pins **81** in an endless row **121** of pins from a lowered (retracted from reading surface **33**) default position (utilizing the device shown in FIG. **14**, for example) to a raised (extended from reading surface **33**) position is illustrated. For ease of illustration, the FIGURES that follow will show a segment of the apparatus of this invention as being linear, the curved implementation required for use at wheel **27** employing the same features and principals. The FIGURES are thus numbered accordingly.

If actuator shaft **51** is retracted when a particular pin **81** passes the actuator location at station **47**, that pin will remain in the lowered position. If actuator shaft **51** is extended when a particular pin **81** passes actuator **49**, then that pin will be moved to the raised position with end **84** protruding forming a dot at surface **33**. Passive retention device **99** (discussed below) is placed immediately adjacent to actuator **49** so that pins **81** are retained in whichever position achieved after passage by actuator **49** as pins **81** pass by reading aperture **39**.

Element **137** at the end of actuator shaft **51** that contacts selected pins heads **85** is preferably sloped (FIG. **8**) relative to the direction of pin travel or rounded (at **139** of FIG. **9**) so that if actuator shaft **51** is extended slightly before the pin arrives, the pin can slide (up the slope or around the curved surface) to the raised position, thereby simplifying the timing issues for control of actuator **49**. If adjacent pins **81** are both to be moved to the raised position, actuator shaft **51** can safely remain extended during the interval between arrival of the two pins, and both pins **81** will be moved relative to the face of the actuator element **137**.

If it is desirable that actuator shaft **51** be retracted in between arrivals of adjacent pins **81** that are to be raised (for example, so that much of the raising operation will be implemented by actuator element **137** pushing pins **81** into position, or if required by the geometry of pins **81** and/or wheel **27**), then actuator **49** must be able to cycle at a rate of arrival of pins **81**. If the actuator can remain in position between the arrival of pins to be raised, then the actuator need only be able to cycle at half the rate of pin arrival for such activity. This implementation choice, and the maximum cycling frequency of actuators **49** ultimately determine the maximum rate at which pins **81** can be processed, and therefore the maximum rate at which Braille text can be displayed. The type of actuator, the driving voltage, the characteristics of any actuator return spring where necessary in a particular embodiment of the actuator, the mass of the pins and of any linkages, and the friction of the system all affect the maximum functional rate of operation of the actuators.

Element **137** (or alternatives thereto discussed hereinafter) at the end of actuator shaft **51** is designed so that it will not extend far enough toward wheel surface **104** to hook or catch on a pin **81** while in the process of retracting. If the actuator is late retracting or late extending, this may result in a pin that is only partially extended. Overall cooperation of the design of the passive retention devices and timing and geometry of the actuator minimizes the risk of this occurrence and errors or device jamming caused thereby.

One option to further minimize such risk is to place a small wheel **139** on the end of actuator shaft **51**, mounted on an axis **141** for rotation (in the direction of pin travel), as shown in FIG. **9**. When actuator shaft **51** is extended, pins **81** contact the small wheel **139** and cause it to rotate. This particular construction maneuvers pins **81** thus contacted into the raised position while reducing lateral forces on the pins. The small wheel **139** must be large enough to shift pins **81** by the desired amount and to have a sufficiently shallow

angle of initial contact with pin heads **85**, yet small enough to avoid interference with adjacent pins. This, in turn, depends in part on the relationship among pin spacing, pin head diameter, and the distance the pins must travel.

The solenoid type actuators shown in FIGS. **8** and **9** are designed to be both extendible and retractable on command, for example utilizing a unidirectional solenoid with spring mounted return motion. An active bi-directional solenoid could also be utilized. The distance of travel of actuator shaft **51**, and thus element **137** at the shaft end, is controlled, for example, by stops or other such means to insure conformance to the geometry requirements of the display apparatus **91**.

Alternative actuator designs and implementations are described hereinafter and some are illustrated in FIGS. **10** through **12**. Instead of using solenoid type actuators, electromagnetic actuators **145** could be utilized as shown in FIG. **10**. The default position of pins **81** would be the raised position (retracted, utilizing the device shown in FIG. **14**, for example) and pins **81** would be made of magnetically responsive metal (in other embodiments, the material utilized for the pins is of little consequence so long as they are robust). A bank of electromagnets **145** (the number and arrangement thereof being the same as heretofore discussed) mounted in the nonrotating assembly **95** at station **47** of rotating wheel **27** are selectively activated to cause selected pins **81** to move to the lowered (extended) position. Pins **81** thus function as an element of the actuator in such case. The configuration and strength of electromagnets **145** and the geometry and assembly must be chosen to prevent one electromagnet from shifting unintended pins **81** in the same or adjacent rows **121**. Avoiding inappropriate shifting of pins may be assisted by slightly staggering the switching area and electromagnet placement along the path of motion for the different adjacent rows **121**, with pins **81** only able to shift in one row at each position (pins in other rows held by a passive retention device **99**, for example).

Use of permanent magnets can assist in achieving the goals of maintenance of small actuator size and quick actuator response. Again pin material and geometry are chosen so that pins **81** will not be inappropriately shifted by the electromagnets. Permanent magnets may be incorporated in pin heads **85** and/or shafts **83**, with electromagnetic coils at the various activation positions. Alternatively, permanent magnets **147** may be incorporated in actuator shafts **149** operating against fixed electromagnets **145** in an actuator body (electromagnetic polarity switching controlling movement of the shaft) as shown in FIG. **11** (exactly the opposite arrangement, as well as combinations thereof, could as well be utilized). Moreover, one large permanent magnet **151** as a fixed component of an actuator could be utilized in conjunction with three (or four) adjacent movable electromagnets **153** (at actuator shafts **149**) to control positioning across the three or four rows **121** of pins **81** (FIG. **12**).

Many other actuator configurations may be conceived of without departing from the intended scope of this invention. For example, a sliding spring or Earth's gravity in a lateral shutter arrangement may be used to assist the motion of the pins. In the case of gravity assist, the orientation of the reader in use must be a constant. In the case of spring assist, the pins must be configured with a projection or similar physical feature part of the way along the shaft against which the spring may act. In either case, the actuators are used to operate sliding shutters that move perpendicular to the axes of the pins (i.e., perpendicular to the direction of motion of the pins), opening and closing apertures. When an aperture is closed, a pin moving past is unable to move along its opening and remains in the default position (either raised or lowered depending upon configuration). When an aperture is opened, the spring or gravity assist moves the pin to the non-default position. In either case, the pin is then held in its selected position by a passive position retention device as it moves across the reading aperture.

Another example is similar to the spring-assisted option above, except that the external force to assist or cause motion of pins along their axes is air pressure (i.e., an external source of pressurized air or a source for partial vacuum). A pressurized air source moving the pins to the raised (extended) position would provide the further benefit of cleaning the device and keeping the pin shafts clear of debris.

Other actuator examples utilizable with this invention include rotary actuators (utilizing linkages to convert rotary to linear motion), cam actuators (allowing pins to pass undisturbed on their flat side and rotatable to a position for moving pins relative to their sloped side) and hydraulic actuators. Rotary or cam actuators can be uni-directional or bi-directional in their rotation, should be able to start and stop rotation rapidly, and must be configured for precision positioning. Use of pneumatic or hydraulic actuators may actually provide additional benefits since the bulk of such devices can be physically located at a position other than directly adjacent to the pins. Factors such as compressibility and mass of the working fluid, elasticity of the conduits, and friction should be considered since each will have an effect upon the response time and maximum rate of operation of the apparatus.

Devices for default positioning of pins **81** after reading are shown in FIGS. **13** through **15**. Again, for ease of illustration, FIG. **13** and FIGURES following show a linear implementation of the default positioning and position retaining systems (a curved implementation for use at a segment of wheel **27** would employ the same structure and principles). The collection of pins **81** mounted through openings (or apertures) **93** in a block of material forming the readable surface **33**, are capable of movement back and forth through the block in their respective openings (in FIGURES and **14**, pins **81** that are moved to the right are considered raised, because tips **84** of pins **81** extend beyond reading surface **33** of the block and are thus felt as bumps, or dots, at the surface). The block segment shown in FIGS. **13** and **14** is moving in the direction illustrated by the arrow with respect to a non-moving retaining wall **161** (for example, surface **163** of structure **97** in FIG. **6**) to which the positioning devices are attached and that limits the extent to which pins **81** can be retracted. As they approach the default positioning devices, pins **81** may be in either the raised or lowered positions.

FIG. **13** shows default positioning device **165** including ramp structure **167** affixed at the non-moving portion (i.e., structure **97**). As wheel **27** moves past ramp **167**, pins **81** that were in the lowered position are forced into the raised position. Pins that are already in the raised position are unaffected. The result is that all of the pins are forced into the raised position (extended from the surface) as they pass ramp **167**, and are kept in that position by extending the end of the ramp along the direction of travel as is needed until acted upon by an actuator (external as in FIG. **2** or magnetic as in FIG. **10**, for example). Note that in a Braille display, the passive system that positions and holds pins in the raised position and the length of the pins must be sufficiently tightly controlled to meet the dimensional specifications for a raised Braille dot.

In FIG. **14** a different type of device (**101** as used in FIG. **6**) is shown. Passive ramp structure **169** is used to force all of the pins to the lowered position (retracted from surface **33**). Since pin shafts **83** must be able to pass unhindered through ramp structure **169**, ramp structure **169** includes plural ramp elements **171** defining slots **173** between element **171** (as shown in FIG. **15** for only three rows **121** of pins **81**, it being understood that a similar ramp structure for four rows of pins could be provided). Slots **173** are wide enough to allow passage of pin shafts **183**, but narrow enough to allow ramp engagement of pin heads **85**. Pins **81** in the lowered (retracted) position can be recessed well below the surface of the block of material, so pin configuration is not as critical for proper Braille reading as would be true for positioning of raised pins. Ramp elements **171** include a leading edge **175** at surface **104** of the block to engage pins **81** in slots **173** (thus the necessity for pin heads with rounded edges to assure smooth engagement). As wheel **27** passes ramp **169**, pins **81** are borne away from the surface **104** by their heads **85**.

FIGS. **16** and **17** illustrate use of passive device **99** to retain pins **81** in raised or lowered position for user reading, in whichever position they are in when they encounter device **99**. Leading edge **179** of device **99** is rounded or pointed or both to minimize the risk that a partially extended pin could jam the device (and thus the entire system). If a pin **81** is in the raised (extended) position, retaining device **99** maintains the pin thereat at top face **181** of head **85**, resisting external forces such as gravity, vibration, and finger pressure to retain the dots in a readable position with end **84** protruding from surface **33**. If a pin **81** is in the lowered position, the retaining device holds the pin in place by underface **183** of head **85** and shaft **83** of the pin passes through slot **185** formed by retainer elements **187** of retaining device **99** (FIG. **17**, only one retaining slot **185** being shown for one of the three or four rows **121** of pins **81**, it being understood that side by side elements **187** forming sufficient such slots **185** for all rows **121** would be provided).

Retaining device **99** serves multiple purposes. It separates pins **81** into distinct raised or lowered positions, allowing the maximum tolerance for pins that may not be in precisely the correct position as they approach and encounter retaining device **99**. It minimizes the risk of a pin jamming in an intermediate position and holds the raised pins with a tight tolerance while they pass through the reading aperture to assure that rounded ends **84** of pins **81** are a correct height above surface **33** of wheel **27** to serve as detectable Braille dots. Retaining device **99** is preferably narrower and/or more centered (relative to pin length at full retraction) at leading edge **179** of the device to better separate pins **81** into retracted or extended states, and is preferably thicker, and thereby closer to wheel surface **104** in the reading area for precise position control of raised pins **81**. Depending upon the dimensions of pin heads **85** with respect to the pin shaft **83** diameter, it may be sufficient to have passive position retention device **99** contact only one side of the pin (head and shaft) thereby eliminating the redundant elements **187** of the device utilized to define slots **185**.

For all passive positioning devices **165**, **101** and **99** shown hereinabove, pin head **85** configuration is important. The various ramps and elements that provide pin raising, lowering and/or retention must be able to contact underface **183** of pins **81** if they are to be lowered (retracted) or retained, and must be able to slide along the pin edge smoothly if they are to be raised (extended).

In particular, where a pin **81** is so extended as to be in contact with surface **104** of wheel **27**, a ramp structure **169** utilized for retracting the pin must be able to be inserted between pin head **85** and surface **104** at its leading edge **175**. In addition to the edges of pin heads **85** being well rounded or otherwise sloped, a thin ridge of material **191** is preferably incorporated with pins **81** (a collar as shown in FIG. **18**) and/or at openings **93** at surface **104** of wheel **27** (a surrounding lip as shown in FIG. **19**) to prevent pin movement to a fully flush position with surface **104** and allow a gap for more ready acceptance of leading edge **175** of ramp structure **169**.

In the event of geometric constraints, for example the diameter of each of the actuators **49** being greater than the spacing between adjacent rows **121** in a Braille cell, methods can be used to concentrate the effects of the multiple actuators **49** down into the space required (i.e., to fit the actuators to the available space). Some such methods include use of shaft linkages **195** (mechanical or flexible linkages, for example) as illustrated in FIG. **20**, or utilization of different pin and/or actuator shaft **51** lengths (see FIG. **21**, for example, wherein actuators **49** are staggered and employ different shaft **51** lengths).

FIG. **22** shows a combination actuator/passive position retention device **200** that includes a flexible or hinged extension **202** positionable by actuator **49** to act as a ramp, guiding pins **81** that contact the ramp from a default position to a non-default position. When extension **202** is raised by actuator shaft **51**, pin heads **85** pass underneath it and remain in the default position. The connection between actuator shaft **51** and extension **202** is offset relative to a line defined by a row **121** of pins **81** so that the moving pins do not impact actuator shaft **51**. This permits use of a relatively long ramping and, thus, a relatively shallow slope to move pins **81**. Changes in position of extension **202** while pins **81** are in transit therealong will cause those pins on the ramp defined by extension **202** to be immediately shifted by some amount but will not effect the final positions of the pins in the reading aperture.

The construction of rotatable outer rim **105** of FIG. **6** can be single piece, with pin shaft openings **93** drilled or molded, or multiple piece, one or two ring layers per row **121** of Braille pins. If assembly **92** is placed in an assembly workstation with drive shaft **109** pointed down, pins **81** may be inserted in openings **93** of outer rim **105** and then rotating assembly **92** lowered down and fitted into place in housing **37**. Non-rotating assembly **95** will prevent pins **81** from falling out of outer rim **105** once it is in place.

The techniques described for a wheel-based display could also be applied to a more conventional structure of a line display. As shown in FIG. **23**, pins **81** can be placed in a linear, nonmoving matrix **208** at a housing (not shown), and assembly **210** moved underneath pin matrix **208** to set pins **81** and thus the Braille dots as heretofore disclosed. Moving assembly **210** includes a passive pin default positioning device **212** (a two ramp structure generally of the type shown in FIGS. **14** and **15** for lowering pins **81**), followed by actuators **49** (one for each row of pins, three or four total for the entire line) and passive pin position retention device **99**. Assembly **210** as shown moves from left to right, with establishment of pin default position being assured at forward ramp **214** of device **212**, writing and fixing the Braille text as it moves. When the user is finished reading the line of Braille text streamed across reading area **33** and signals for a refresh, moving assembly **210** travels back (from right to left in the FIGURE), with actuator shafts **51** retracted. The reversed ramp **216** of passive default positioning device **212** lowers any pins **81** that were raised to allow passage of passive default positioning device **212** during return.

Instead of device **212**, pin reset can be performed as a separate function, for example by a roller or magnet that sweeps across the display area. Additionally, it may be desirable to shield the part of the line of Braille text being written from finger contact, by a protective cover over the section of the display that is being written (at actuator **49**) and that follows the position of the moving actuator or actuators. The cover should not prevent tactile access to pins **81** that have already been set and that are being held in place by retention device **99**. With such a cover in place, the actuators that set the pins need not work against finger pressure, permitting faster writing action, with lower powered actuators. Actuators **49** that set pins **81** need not be mounted directly on assembly **210**. Mechanical linkages to assembly **210** responsive to actuators **49** located at a fixed position could be conceived to drive a mechanical pin setting apparatus at assembly **210**.

Passive pin retention device **99** is configured to be as long as the entire line of Braille cells in the display. Thus the entire Braille display assembly in this case will be more than twice as long as the line of Braille displayed. If, however, the passive pin retention device is made of strips of flexible material, supported along the sides away from the pins and of sufficient flexibility to support large-radius curves along its length but sufficiently stiff to prevent lateral flexing (steel tape for example), then the strips may be guided along tracks, grooves and/or wheels to wrap around under the moving assembly and thus extend to at its end in the direction opposite the direction of actuator movement. This would allow a linear display to be built with a total length not much greater than the length of the line of Braille displayed. If the material forming the retention device were even thinner and more flexible, the retention device could be maintained, fed from and reloaded at a spring-loaded roller.

A linear display would display a line at a time, and the line would be scanned in from one end to the other, unlike the near-simultaneous update possible with the conventional linear displays that use a separate actuator for each dot. However, with fast actuators, the time to write an entire line would be relatively short. Given the savings achievable in cost of the linear device of this invention due to the greatly reduced number of actuators, the time delay is felt to be acceptable.

Any degree of friction in the display system of this invention increases the amount of energy required to operate the display and increases the potential for wear of parts. A certain amount of friction in the motion of the pins along their shafts may be desirable to prevent the pins from slipping out of position during text or other tactile display cycling (i.e., during the transition from actuator to retaining device, from retaining device to passive positioning device, and from passive positioning device to actuator), thus rendering the device less susceptible to outside influences of gravity and vibration. A certain amount of friction in the system can also reduce the risk of build-up of internal vibrations leading to excessive system noise, timing errors and damage.

With these factors in mind, production of the display should take into account both the friction and the wear resistance of the components. Some form of lubrication is desirable (for example, a dry powder lubricant such a graphite or, where stiffening of component movement is desired, various known greases). Friction may be introduced into the system in a controlled manner at the transition points in the display cycle by application of a soft, compressible material such as felt, for example.

Pin shafts with a circular cross-section may have a tendency to rotate in their openings as the wheel rotates. This will not affect readability of the display at the viewing aperture, but may result in a risk of accelerated or uneven wear of the pin or the opening in which the pin moves. Pin rotation can be eliminated by utilization of pin and opening configurations defined by a non-circular cross-section.

Conventional Braille uses two dot levels, extended (dot) and retracted (no dot). It is possible to generate additional levels, however, for other application utilizing the display device of this invention by employing actuators capable of multi-position extension and multiple position retention devices **219** (as illustrated in FIG. **24**, replacing the two position devices as shown in FIGS. **16** and **17**, for example).

Turning now to FIGS. **25** through **28**, embodiments of this invention configured to allow extensive actuation of pins no matter direction of travel of the cylinder (or relative direction of travel of actuators and pins in other embodiments) are shown. In these FIGURES, it should be understood that the illustration of the embodiments have been greatly simplified, but that all elements previously discussed (particularly with reference to FIG. **6**) can be and are applied in the embodiments discussed hereinbelow unless otherwise noted. In particular, the various actuator (at least in part) and pin embodiments discussed are understood to be applicable herein as are the various position retaining devices heretofore discussed. It is desirable, however, for at least some of the embodiments discussed below to eliminate the various passive default pin positioning devices heretofore discussed for reset of the pins.

A first embodiment of the apparatus and method utilizing bi-directional relative movement for implementation of a refreshable tactile display is illustrated by FIG. **25**, wherein passive reset of rows **121** of pins **81** in openings **93** as heretofore described (for ease of illustration, none are shown in FIG. **25** or **26**; refer to FIG. **6**) is accomplished with a two ramp default positioning device **212** (as discussed with respect to FIG. **23**). Device **212** is located between assembly **45** and a second set, or assembly, **250** of actuators much like assembly **45**, the two assemblies together comprising an actuator station **255**.

The arrow shows the direction of normal rotation of cylinder **27** for normal reading and advancement of the Braille text, with pins being set by actuator assembly **45**, assembly **250** being inactive. If the user wishes to re-read text that was displayed at reading, or display, area **39** on surface **33** but which has already passed from display area **39** (effectively reading backward), the direction of rotation of cylinder **27** is reversed by the user at user input **75** of controller **65**, and the second set of actuators **250** sets the pattern of Braille text as far back as the user wishes to read (assembly **45** remains inactive during this period) under the control of properly programmed control implementation **65**/driver **81** (FIG. **4**). Position retaining device **99** and default positioning device **212** operate as before and are accessible in either direction of cylinder rotation.

FIG. **26** shows another implementation of a bi-directionally rotatable cylinder for streaming Braille text in either forward or backward order at display area **39**, with only a single set, or assembly, **260** of actuators at station **262**. In this case actuators that can set or reset pins, regardless of the initial positions of the pins, by contacting and moving a pin in either direction in its opening. This design takes advantage of the fact that the user does not expect any text that has already been read to change, so with no automatic reset, all of the text that is at the bottom of the cylinder (outside of the reading area) is still readable if the direction of the rotation of the cylinder is reversed. The single set of

actuators **260** is therefore used for both forward and reverse writing (under the control of properly programmed control implementation **65**/driver **81**), and the user reading the Braille text can thus request movement arbitrarily far forward or backward along the line of text by controlling cylinder rotation at user input **75** of controller **65** (FIG. **4**). Again, position retaining device **99** operates as before and is accessible in either direction of cylinder rotation.

FIG. **27** illustrates one way to implement the array of dual directional actuators **260** to control position of pins **81**. Actuator shafts **265** of individual actuators **266** in assembly **260** (only one of which is shown in FIG. **27** for ease of illustration) are configured with arms **267** and **269** each having a contact tip **271** and **272**, respectively, thereat. Actuators **266** are positioned so that contact tips **271** and **272** are located to provide the ability for the actuator to push either head **85** (by contact tip **271** at inner cylindrical surface **104**) or pin tip **84** (by contact tip **272** at cylindrical outer surface **33**) of each pin **81**, causing pin **81** to be extended or retracted in opening **93**, regardless of the initial position of the pin. Bi-directional mechanical drivers **275** for extending and retracting shafts **265** can be used. Alternatively, in some embodiments, a single-directional driver with high speed return mechanism, such as a spring, could be utilized. FIG. **28** illustrates a portion of assembly **260** of actuators **266** showing one construction of shaft arms **269** thereof (arms **267** would be similarly constructed) providing offset constructs **276** at the end of some of the shaft arms (in advance of contact tips **271** and **272**) in assembly **260** so that all pins **81** across rows **121** of pins in the Braille cells can be controlled.

It should be appreciated, as made evident in FIGS. **27** and **28**, that drivers **275** of individual actuators **266** in assembly **260** are not, as heretofore taught, positioned inside cylinder **27** (as illustrated in FIG. **4**). Instead, the drivers must be positioned so that actuator shafts **265** move adjacent to one circumferential edge **277** (either inside or outside) of cylinder **27**, thus allowing arms **267** and **269** access at either side of pins **81**, one arm above surface **33** and one arm below surface **104** of cylinder **27**. Moreover, while actuator assemblies **250** and **45** in combination with default positioning device **212** are illustrated in FIG. **25**, device **212** could be eliminated from this embodiment by providing dual directional actuator assemblies **260** in place of assemblies **250** and **45**.

Use of either embodiment having dual directional actuators as taught herein (using either a single actuator assembly or a pair of actuator assemblies) preferably employs static actuators in an actuator assembly at least equal in number to the rows of openings through the cylinder, with pins in the rows thereby being selectively contactable by different ones of the actuators in an assembly during cylinder rotation in either forward or reverse direction so that the tips of the pins are selectively positioned relative to the surface of the cylinder in the display area. In this way Braille text is selectively streamed across the display area in either forward or backward order depending upon direction of cylinder rotation.

The use of a bi-directional actuation mechanism as described herein can also be used with the linear or multiline display device of this invention (as shown in FIG. **23**). Use of bi-directional actuation would eliminate the need for a separate pin reset device (**212** in FIG. **23**), and allow the write head assembly (**210** in FIG. **23**) to operate in both directions. For example, an actuator assembly **260** discussed above could write one line of Braille on a left to right sweep across the line of the display, then write the next line on the return (right to left) sweep. Such an implementation of the device shown in FIG. **23** would require a modification of the pin retention device **99** to provide a pin retention device that could track the actuators at assembly **210** from both the right and left and that could be released independent of the motion of the write head assembly.

As may be appreciated, the various line displays in accord with this invention could be combined in a single unit to produce multi-line displays. A single set of actuators could be shifted between pin set arrays to write a line at a time in sequence (separate pin retention and default positioning devices would be required for each pin set array, separate motors for each pin set array utilized to retract all the pin position retention devices simultaneously, thus speeding page refresh).

Alternative configurations of the wheel or cylinder based display could include configuration with the inner surface of the wheel as the reading surface rather than the outer surface (with appropriate provision of a reading aperture adjacent to the inner surface of the outer ring). Such configuration would simplify positioning of the non-rotating parts since they would be mounted outside the wheel rather than inside it. Another alternative configuration would include an optional user preprogrammed stop/start mode which would cause the Braille wheel to stop rotation at selected intervals until prompted by the user, allowing the user to read text of the selected length while the wheel is motionless.

The linear or wheel-based displays of this invention could be used for graphic applications by provision of more than three or four rows of pins. In such case, graphic capabilities would be enhanced by the ability to achieve multi-level positioning of the pins as discussed hereinabove with respect to FIG. **24**. Use of an elastic sheet stretched over the display area could be used to smooth out irregularities of the display caused by the discrete placement of the pins. Furthermore, non-display applications are possible utilizing the principles herein disclosed, for example in the field of mechanical data storage or other MEMS applications.

What is claimed is:

1. A refreshable Braille reader comprising:

a display assembly having an outer surface, said surface having a plurality of openings therethrough with said openings arranged at said surface in rows;

a plurality of pins having first and second ends, each one of said pins mounted in a different one of said openings and movable therein; and

actuating means maintained at a station adjacent to said surface of said display assembly for moving said pins, said pins selectively contactable by said actuating means to move said pins in said openings so that said first ends of said pins are selectively raised from or not raised from said surface, at least one of said actuating means and said display assembly being movable relative to the other of said actuating means and said display assembly in either of two directions, said actuating means capable of causing controlled pin movement in said openings while relative movement occurs in either of said two directions.

2. The Braille reader of claim **1** wherein said actuating means includes at least a first actuator assembly having actuators at least equal in number to number of said rows of said openings, each said actuator including a driver, a shaft selectively extendible and retractable by said driver and first and second contact tips at said shaft, said contact tips of each said actuator in said actuator assembly positioned relative to said pins in a said row so that said first contact tip can

selectively contact said first ends of said pins and said second contact tip can selectively contact said second ends of said pins.

3. The Braille reader of claim **2** wherein said actuators in said actuator assembly each include first and second arms extending between said shaft and said first and second contact tips, respectively, said first arm for location at one side of said display assembly and said second arm for location at an opposite side of said display assembly.

4. The Braille reader of claim **2** wherein at least some of said actuators in said actuator assembly include offset constructs allowing side by side placement of said actuators while accommodating access by different actuators to said pins in different said rows.

5. The Braille reader of claim **1** further comprising a static position retainer adjacent to said surface of said display assembly for passively securing position of said pins during a selected extent of said relative movement between said actuating means and said display assembly.

6. The Braille reader of claim **5** wherein said pins each include a head at said second end and a shaft between said first and second ends, and wherein said static position retainer includes retainer elements at least equal in number to said rows of openings at said surface of said display assembly, said pin heads retained at one side or the other of said retainer elements during pin presentation to a reader.

7. The Braille reader of claim **5** wherein said actuating means includes at least first and second actuator assemblies each having actuators at least equal in number to number of said rows of said openings, said first actuator assembly positioned at one side of said static position retainer and said second actuator assembly positioned at an opposite side of said static position retainer, said first actuator assembly selectively causing controlled pin movement in said openings while relative movement occurs in a first of said two directions and said second actuator assembly selectively causing controlled pin movement in said openings while relative movement occurs in a second of said two directions.

8. The refreshable Braille reader of claim **7** further comprising a passive pin positioner for returning pins to a preselected default position relative to said outer surface of said display assembly, said passive pin positioner located between said first and second actuator assemblies.

9. The refreshable Braille reader of claim **1** further comprising a motor adapted for effecting said relative movement of said actuating means and said display assembly and a controller connectable with a text driver, wherein said motor and said actuating means are connected with said controller for controlling said relative movement and selected actuating means contact with said pins.

10. A refreshable Braille reader comprising:

a cylinder connected with a motor for rotation thereof in either of two directions, said cylinder having a cylindrical outer surface a part of which defines a tactile display area and a cylindrical inner surface, said cylinder having a plurality of openings therethrough between said surfaces, said openings arranged in at least three endless rows;

a plurality of pins having first and second ends, each one of said pins mounted in a different one of said openings and movable therein;

static actuators at least equal in number to said rows of openings through said cylinder maintained at a station adjacent to said cylinder, said actuators positioned and configured so that said pins are selectively contactable at either of said ends by different ones of said actuators during cylinder rotation in either of said two directions so that said first ends of said pins are selectively positioned relative to said outer surface of said cylinder thereby streaming Braille text across said display area in either forward or backward order depending upon selected direction of cylinder rotation; and

user controls allowing control at least of direction of rotation of said cylinder.

11. The Braille reader of claim **10** wherein each said actuator includes a selectively extendible and retractable shaft and first and second contact tips at first and second arms, respectively, extending from said shaft, said first arm for location adjacent to said outer surface of said cylinder and said second arm for location adjacent to said inner surface of said cylinder, said contact tips of each said actuator positioned relative to said pins in a said row so that said first contact tip can selectively contact said first ends of said pins and said second contact tip can selectively contact said second ends of said pins.

12. The Braille reader of claim **10** wherein at least some of said actuators include offset constructs allowing side by side placement of said actuators while accommodating access by different actuators to said pins in different said rows.

13. The Braille reader of claim **10** wherein said actuators include at least first and second sets of actuators, each said set having actuators at least equal in number to number of said rows of said openings with said first actuator set positioned at one side of said tactile display area and said second actuator set positioned at an opposite side of said tactile display area, said first actuator set selectively causing controlled pin movement in said openings for steaming Braille text in said forward order and said second actuator set for causing controlled pin movement in said openings for streaming Braille text in said backward order.

14. The Braille reader of claim **10** further comprising a static position retainer adjacent to said inner surface of said cylinder opposite said part of said outer surface of said cylinder for passively securing position of said pins during rotation through said display area.

15. A method for streaming Braille text in either forward or backward order at a display area comprising the steps of:

effecting relative movement in either of two directions between a station and a display surface;

selectively activating actuators at said station while effecting said relative movement in a first of said two directions to set pins at selected positions relative to said display surface by contact with said pins;

effecting relative movement in either said first or a second of said two directions to selectively reset said pins at selected positions relative to said display surface by selectively activating said actuators at said station to cause contact with said pins; and

movement of said pins relative to said display surface in either of said two directions of relative movement occurring only by selective contact from said actuators.

16. The method for streaming Braille text of claim **15** wherein said relative movement is rotary movement.

17. The method for streaming Braille text of claim **15** further comprising the steps of monitoring relative location of said actuators and said display surface pin positions and controlling said relative movement and actuator activation in response thereto.

18. The method for streaming Braille text of claim **15** further comprising the step of passively retaining position of said pins after setting by said actuators and during display at said display surface by physically restraining pin movement.

19. The method for streaming Braille text of claim **15** wherein pin setting while relative movement occurs in said first of said two directions is effected by a first set of actuators and wherein pin setting while relative movement occurs in said second of said two directions is effected by a second set of actuators.

20. The method for streaming Braille text of claim **15** wherein said pins have first and second ends and wherein said pins are selectively contactable at either of said ends by different ones of said actuators during said relative movement in either of said two directions thereby selectively streaming Braille text across said display surface in either forward or backward order depending upon direction of said relative movement.

21. A method for streaming Braille text in either forward or backward order at a display area comprising the steps of:

effecting relative movement in either of two directions between a station and a display surface;

selectively activating actuators at said station while effecting said relative movement in a first of said two directions to set pins at selected positions relative to said display surface by contact with said pins;

effecting relative movement in either said first or a second of said two directions to selectively reset said pins at selected positions relative to said display surface by selectively activating said actuators at said station to cause contact with said pins; and

wherein pin setting while relative movement occurs in said first of said two directions is effected by a first set of said actuators and wherein pin setting while relative movement occurs in said second of said two directions is effected by a second set of said actuators.

22. A method for streaming Braille text in either forward or backward order at a display area comprising the steps of:

effecting relative movement in either of two directions between a station and a display surface;

selectively activating actuators at said station while effecting said relative movement in a first of said two directions to set pins having first and second ends at selected positions relative to said display surface by contact with said pins;

effecting relative movement in either said first or a second of said two directions to selectively reset said pins at selected positions relative to said display surface by selectively activating said actuators at said station to cause contact with said pins; and

wherein said pins are selectively contactable at either of said ends by different ones of said actuators during said relative movement in either of said two directions thereby selectively streaming Braille text across said display surface in either forward or backward order depending upon direction of said relative movement.

23. The method f or streaming Braille text of claim **22** further comprising the step of passively retaining position of said pins after setting by said actuators at least during display at said display surface.

24. The method for streaming Braille text of claim **22** wherein said relative movement is rotary movement, said method further comprising the steps of monitoring relative location of said actuators and said selected positions of said pins relative to said display surface, and controlling said rotary movement and actuator activation in response thereto.

* * * * *