US006119522A

United States Patent [19]

Johnson et al.

[11] **Patent Number: 6,119,522**

[45] **Date of Patent: *Sep. 19, 2000**

[54] **ELECTROMAGNETIC ACOUSTIC TRANSDUCER AND METHODS OF DETERMINING PHYSICAL PROPERTIES OF CYLINDRICAL BODIES USING AN ELECTROMAGNETIC ACOUSTIC TRANSDUCER**

[75] Inventors: **Ward L. Johnson**, Gaithersburg, Md.; **George A. Alers**, Boulder, Colo.; **Bertram A. Auld**, Menlo Park, Calif.

[73] Assignee: **The United States of America as represented by the Secretary of Commerce**, Washington, D.C.

[*] Notice: This patent is subject to a terminal disclaimer.

[21] Appl. No.: **09/294,979**

[22] Filed: **Apr. 19, 1999**

Related U.S. Application Data

[60] Continuation-in-part of application No. 09/157,082, Sep. 18, 1998, which is a division of application No. 08/285,018, Aug. 2, 1994, Pat. No. 5,895,856.

[51] **Int. Cl.**[7] **G01N 29/24**

[52] **U.S. Cl.** **73/643**; 73/668

[58] **Field of Search** 73/643, 578, 576, 73/668, 573, 602, 622, 623, 650, 659

[56] **References Cited**

U.S. PATENT DOCUMENTS

4,248,092	2/1981	Vasile et al.	73/643
4,289,030	9/1981	Alers et al.	73/643
4,305,294	12/1981	Vasile et al.	73/643
4,450,725	5/1984	Yamaguchi et al.	73/643
4,466,287	8/1984	Repplinger et al.	73/643
5,895,856	4/1999	Johnson et al.	73/643

Primary Examiner—Helen C. Kwok
Attorney, Agent, or Firm—Holland & Hart LLP

[57] **ABSTRACT**

An electromagnetic acoustic transducer for inducing and sensing vibrations in a cylindrical object and methods of using an electromagnetic acoustic transducer to determine resonant frequencies and physical properties of cylindrical objects. The electromagnetic acoustic transducers produce specific modes of vibration in cylindrical objects including axial shear vibrations. The electromagnetic acoustic transducers are used to determine the temperature, dimensions, elastic constants, and damping coefficients of cylindrical objects, the magnitude of a load applied to a cylindrical object, or the texture or grain orientation of the material forming a cylindrical object.

15 Claims, 12 Drawing Sheets

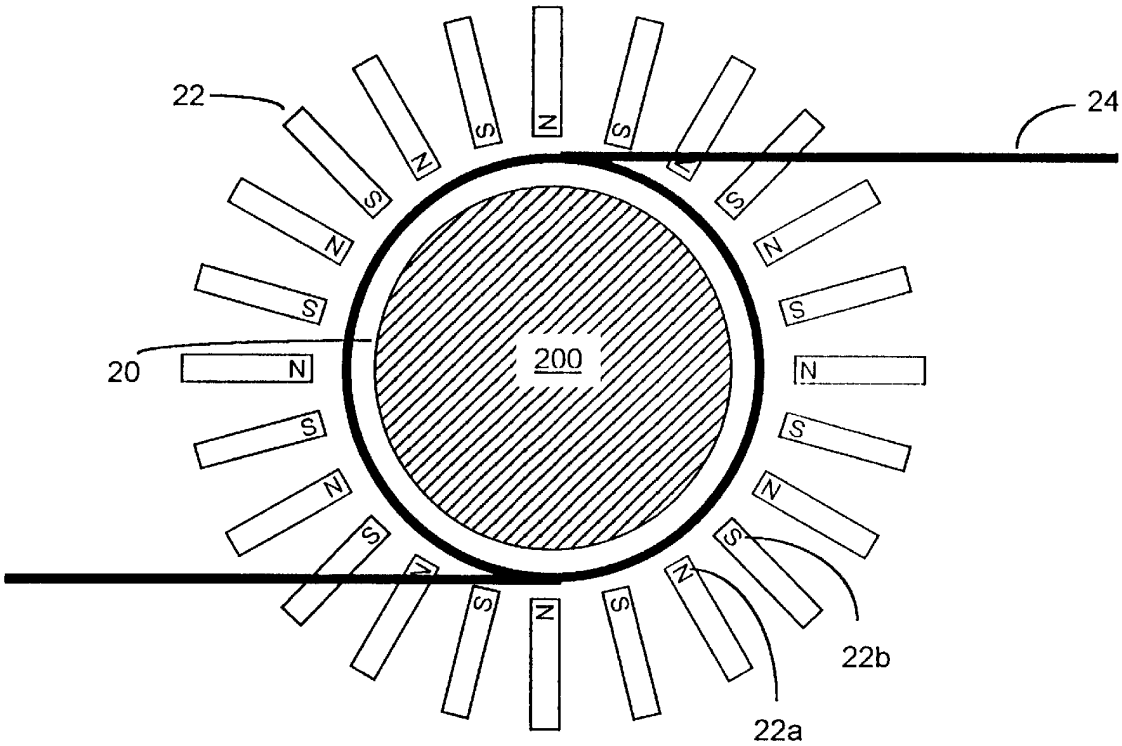

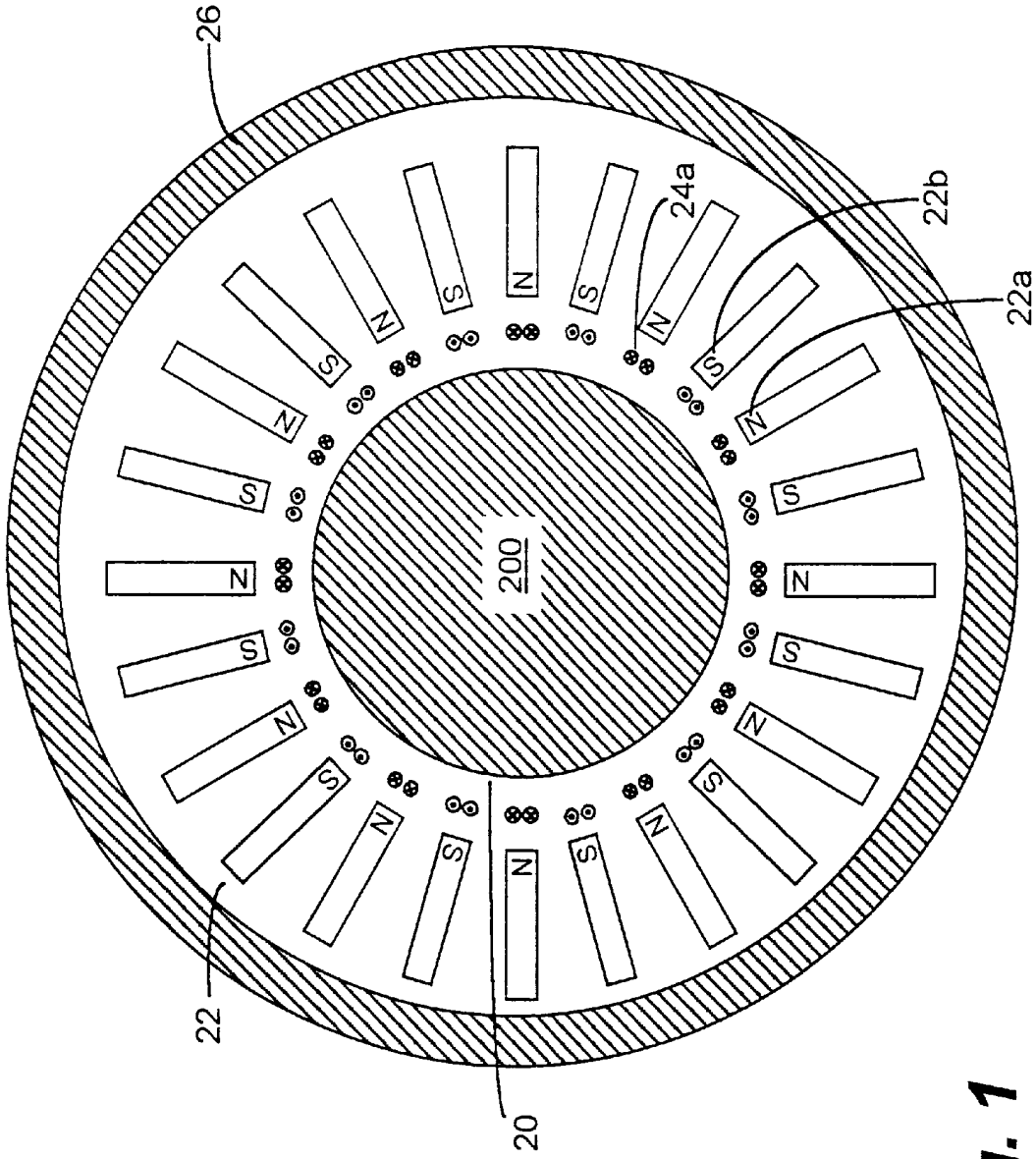

Fig. 1

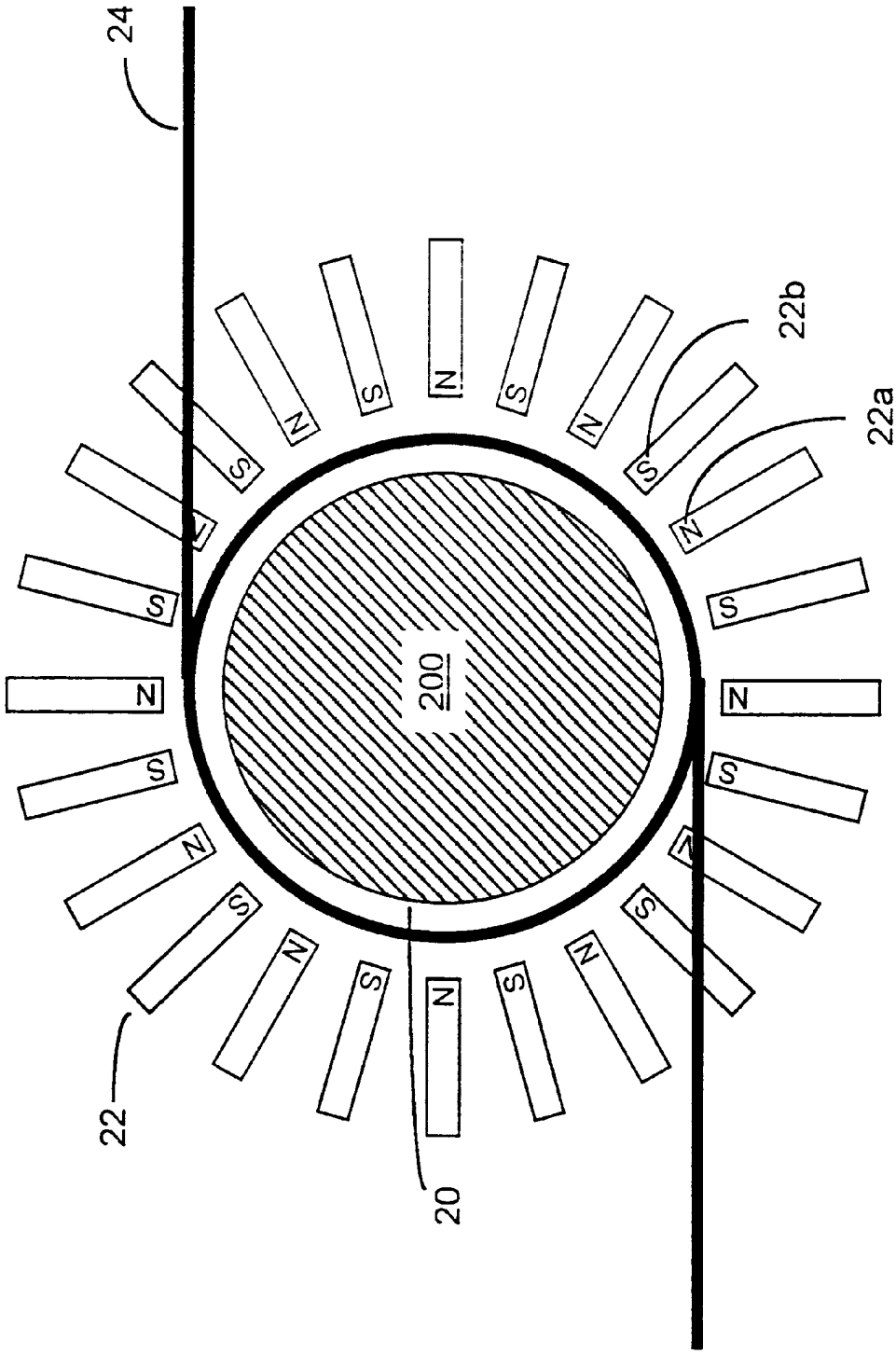

Fig. 2

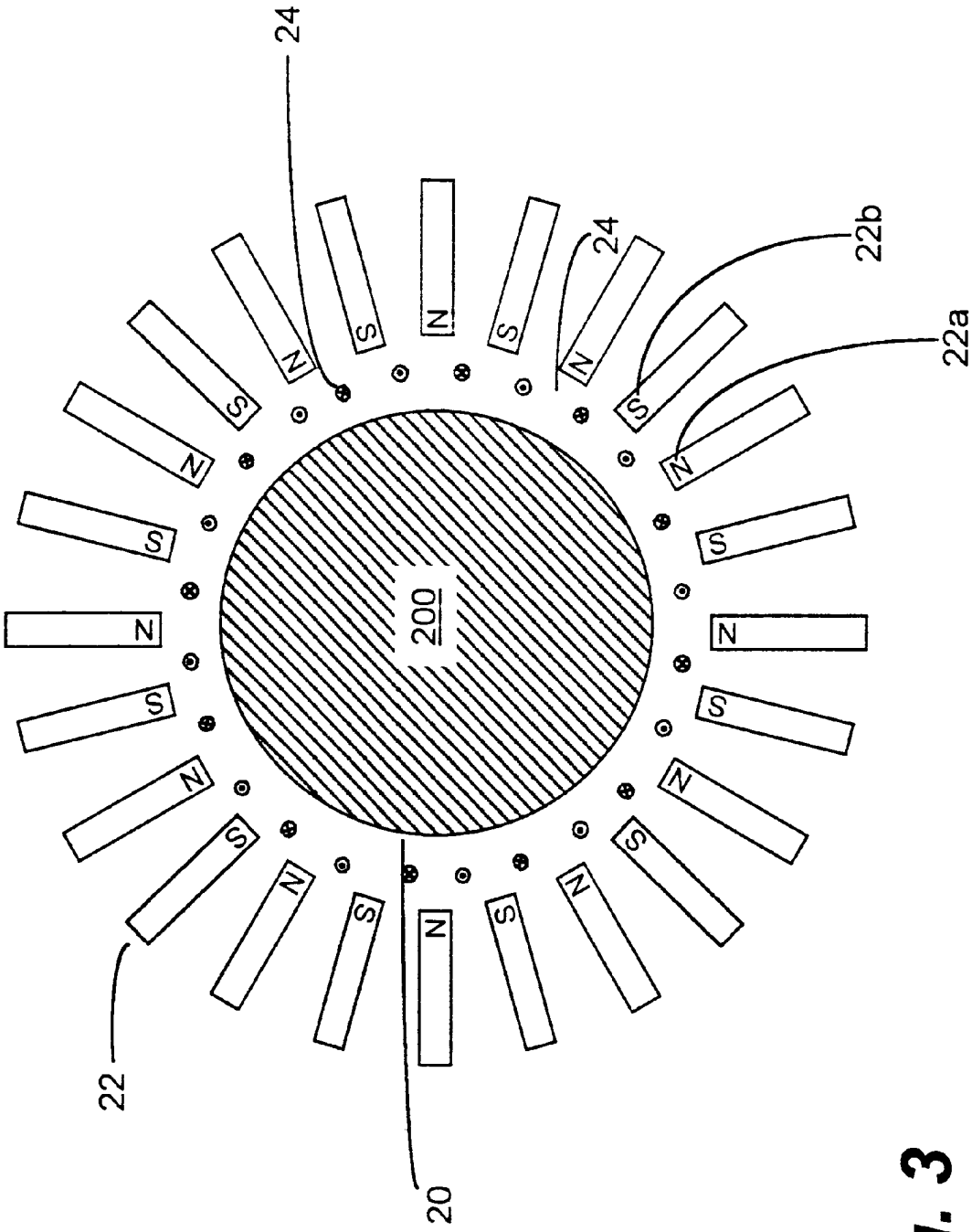

Fig. 3

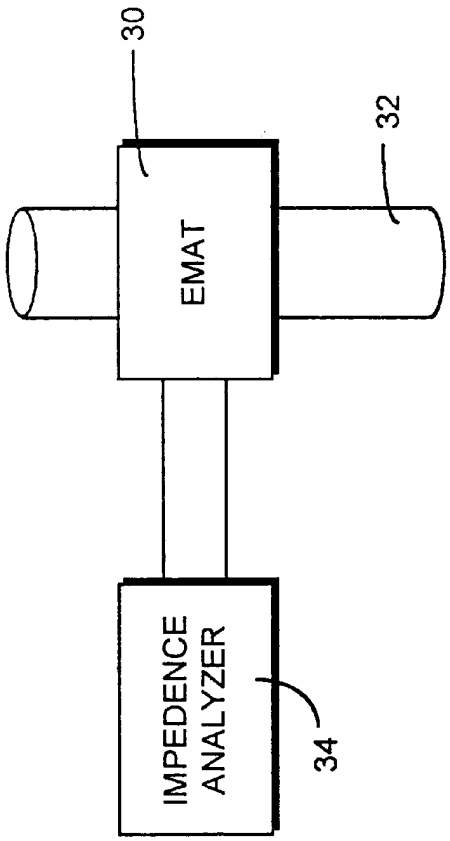
30
EMAT
32
IMPEDENCE ANALYZER
34

Fig. 4

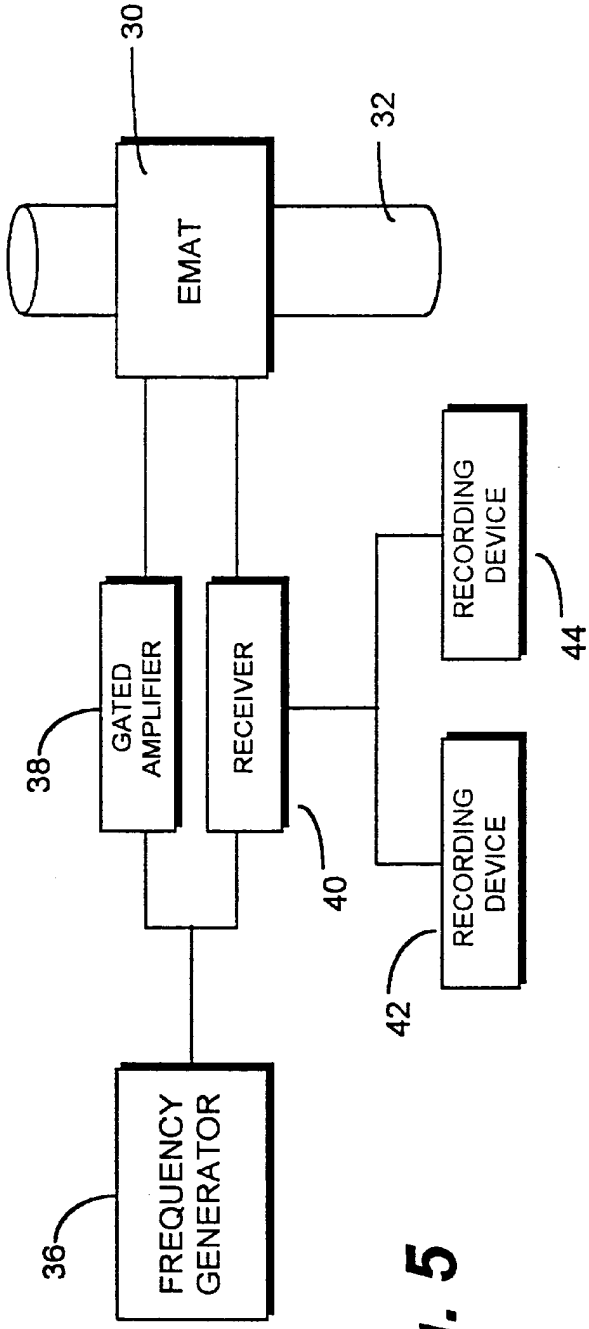
30
EMAT
32
GATED AMPLIFIER
38
RECEIVER
40
RECORDING DEVICE
44
RECORDING DEVICE
42
FREQUENCY GENERATOR
36

Fig. 5

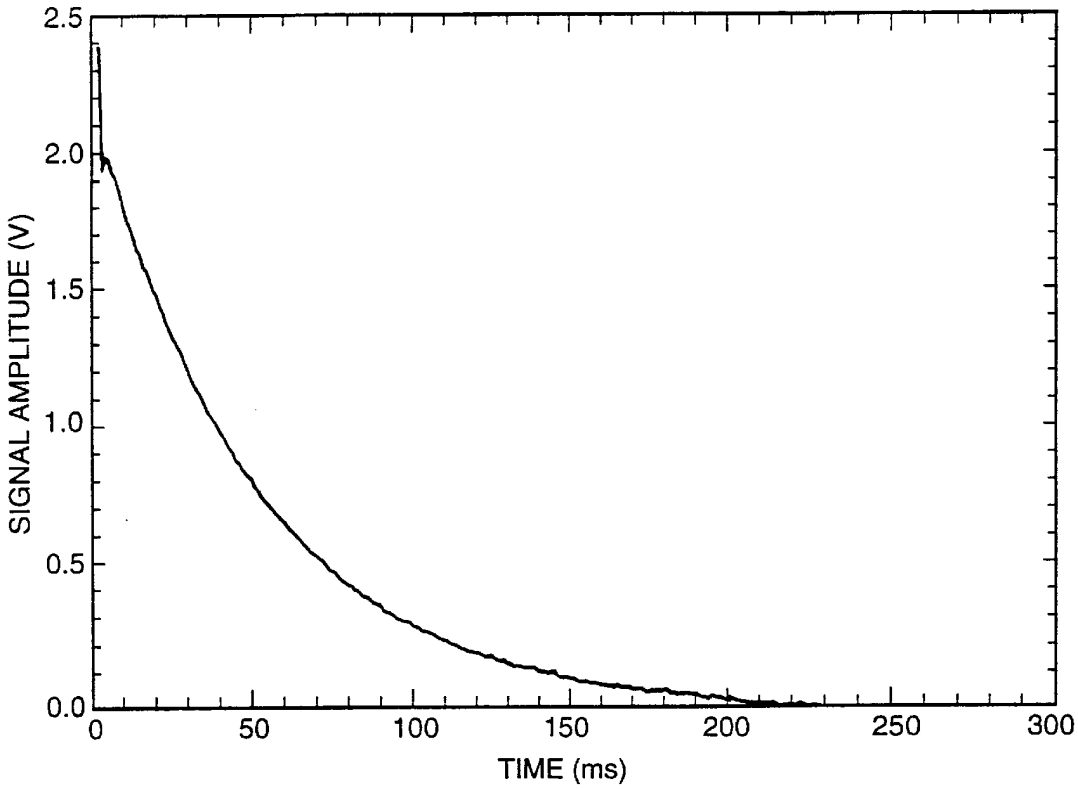
2.5
2.0
1.5
1.0
0.5
0.0
SIGNAL AMPLITUDE (V)
0
50
100
150
200
250
300
TIME (ms)

Fig. 6

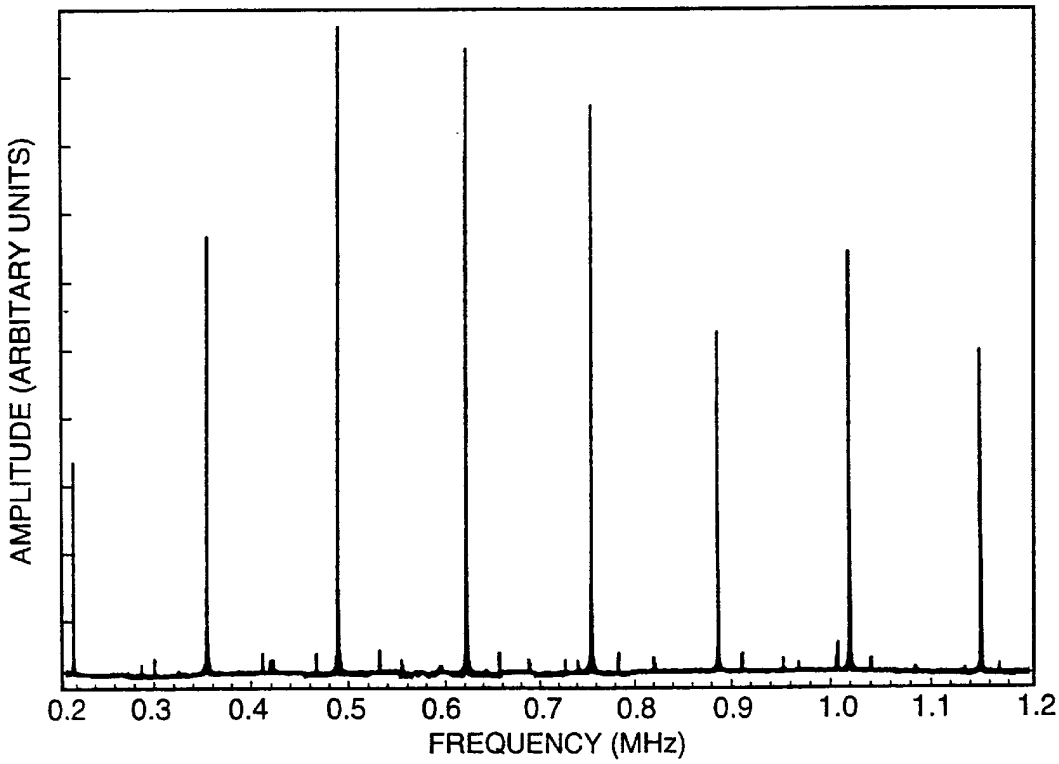
AMPLITUDE (ARBITARY UNITS)
0.2
0.3
0.4
0.5
0.6
0.7
0.8
0.9
1.0
1.1
1.2
FREQUENCY (MHz)

Fig. 7

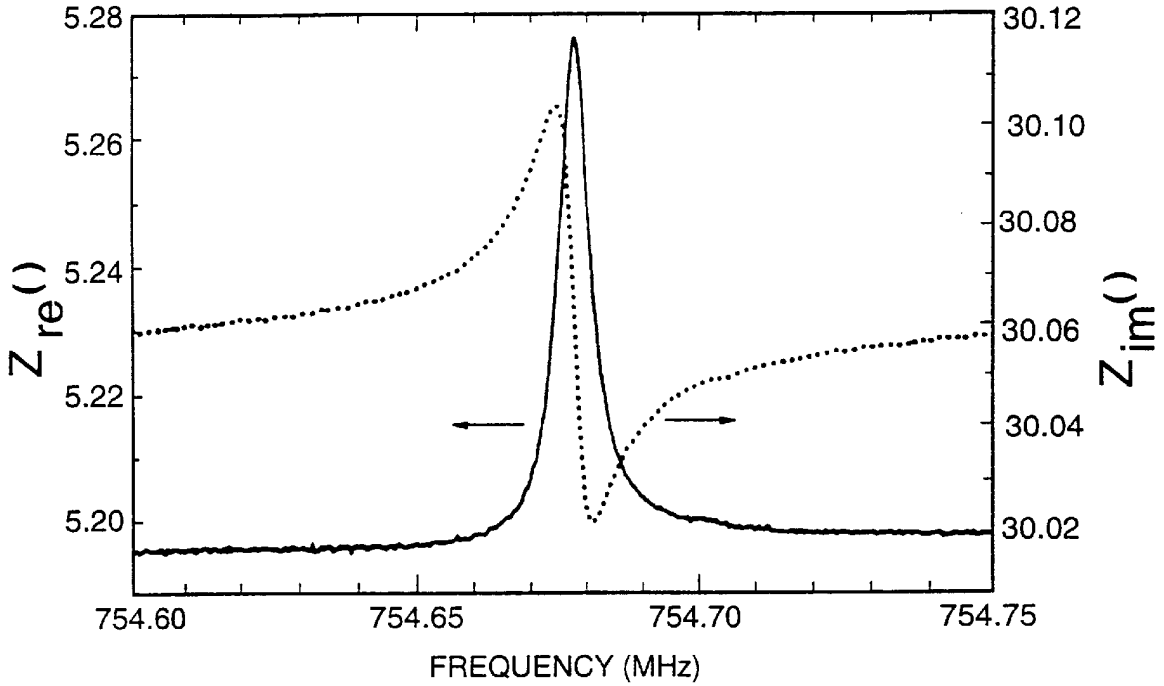
5.28
5.26
5.24
5.22
5.20
Z re()
30.12
30.10
30.08
30.06
30.04
30.02
Z im()
754.60
754.65
754.70
754.75
FREQUENCY (MHz)

Fig. 8

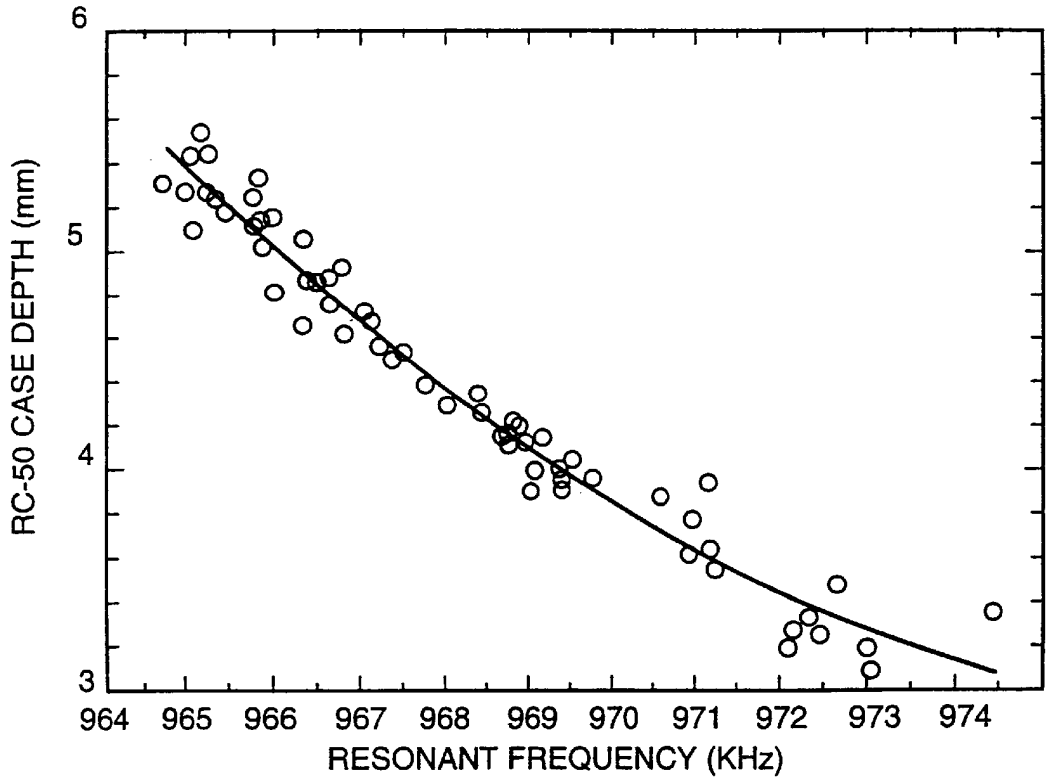
6
5
4
3
RC-50 CASE DEPTH (mm)
964
965
966
967
968
969
970
971
972
973
974
RESONANT FREQUENCY (KHz)

Fig. 10

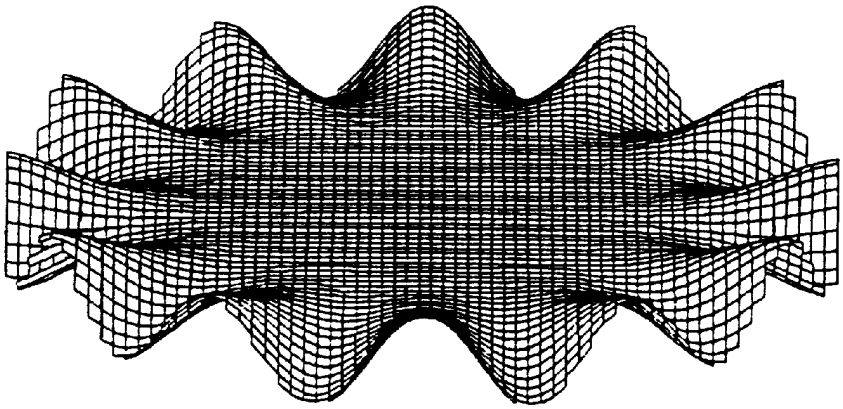

p=1

Fig. 9A

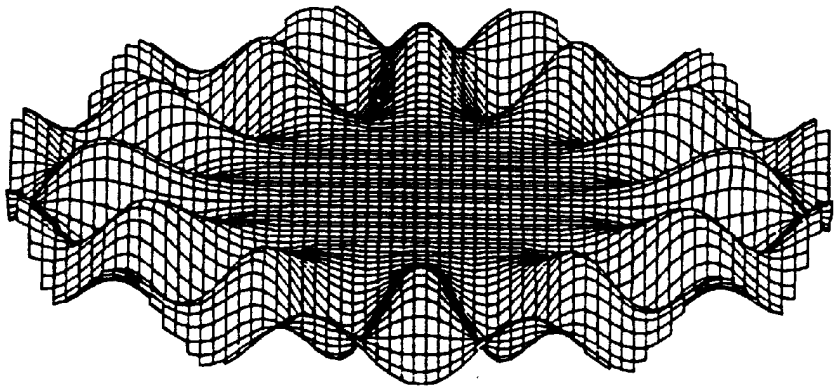

p=2

Fig. 9B

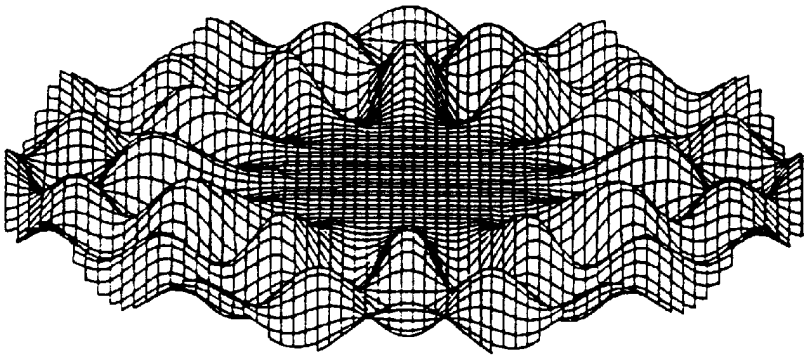

p=3

Fig. 9C

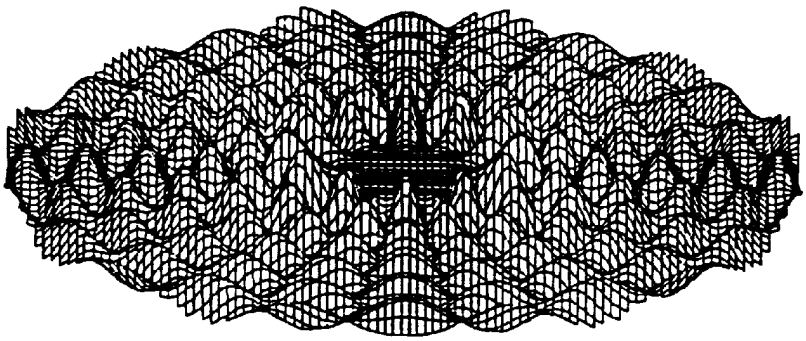

p=10

Fig. 9D

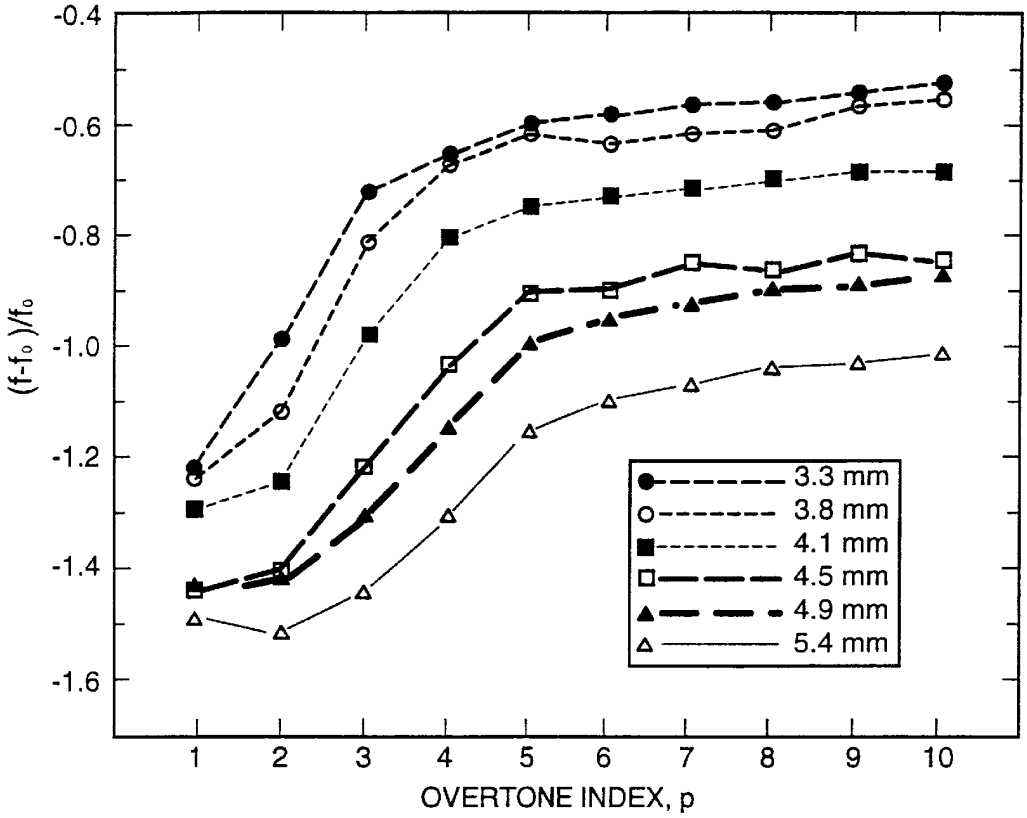
-0.4
-0.6
-0.8
-1.0
-1.2
-1.4
-1.6
(f-fo)/fo
1
2
3
4
5
6
7
8
9
10
OVERTONE INDEX, p
3.3 mm
3.8 mm
4.1 mm
4.5 mm
4.9 mm
5.4 mm

Fig. 11

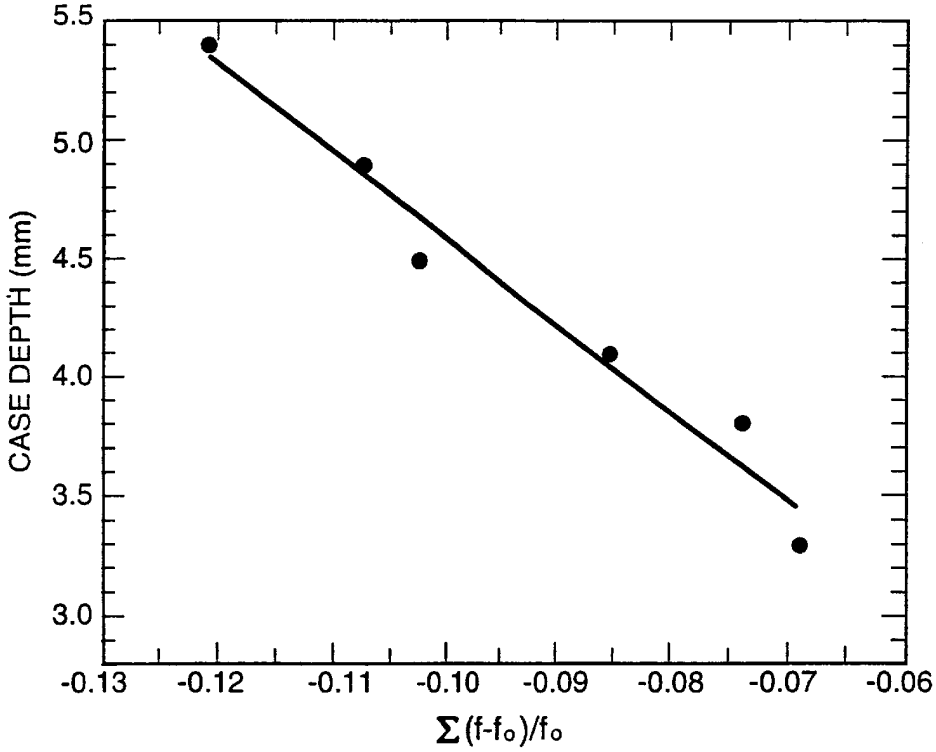
5.5
5.0
4.5
4.0
3.5
3.0
CASE DEPTH (mm)
-0.13
-0.12
-0.11
-0.10
-0.09
-0.08
-0.07
-0.06
Σ(f-fo)/fo

Fig. 12

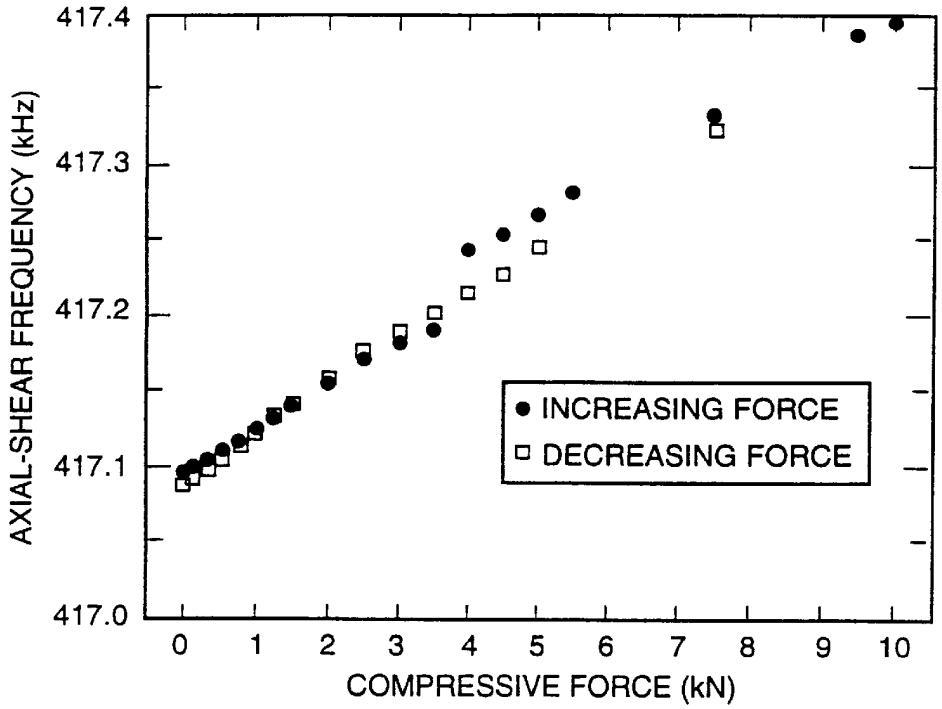
417.4
417.3
417.2
417.1
417.0
AXIAL-SHEAR FREQUENCY (kHz)
0
1
2
3
4
5
6
7
8
9
10
COMPRESSIVE FORCE (kN)
INCREASING FORCE
DECREASING FORCE

Fig. 13

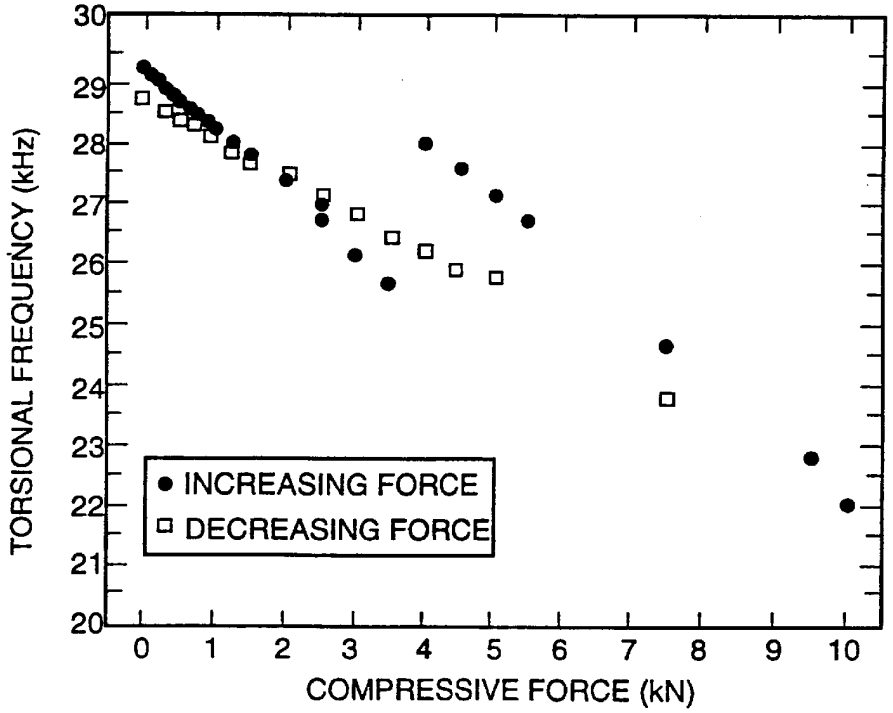
30
29
28
27
26
25
24
23
22
21
20
TORSIONAL FREQUENCY (kHz)
0
1
2
3
4
5
6
7
8
9
10
COMPRESSIVE FORCE (kN)
INCREASING FORCE
DECREASING FORCE

Fig. 14

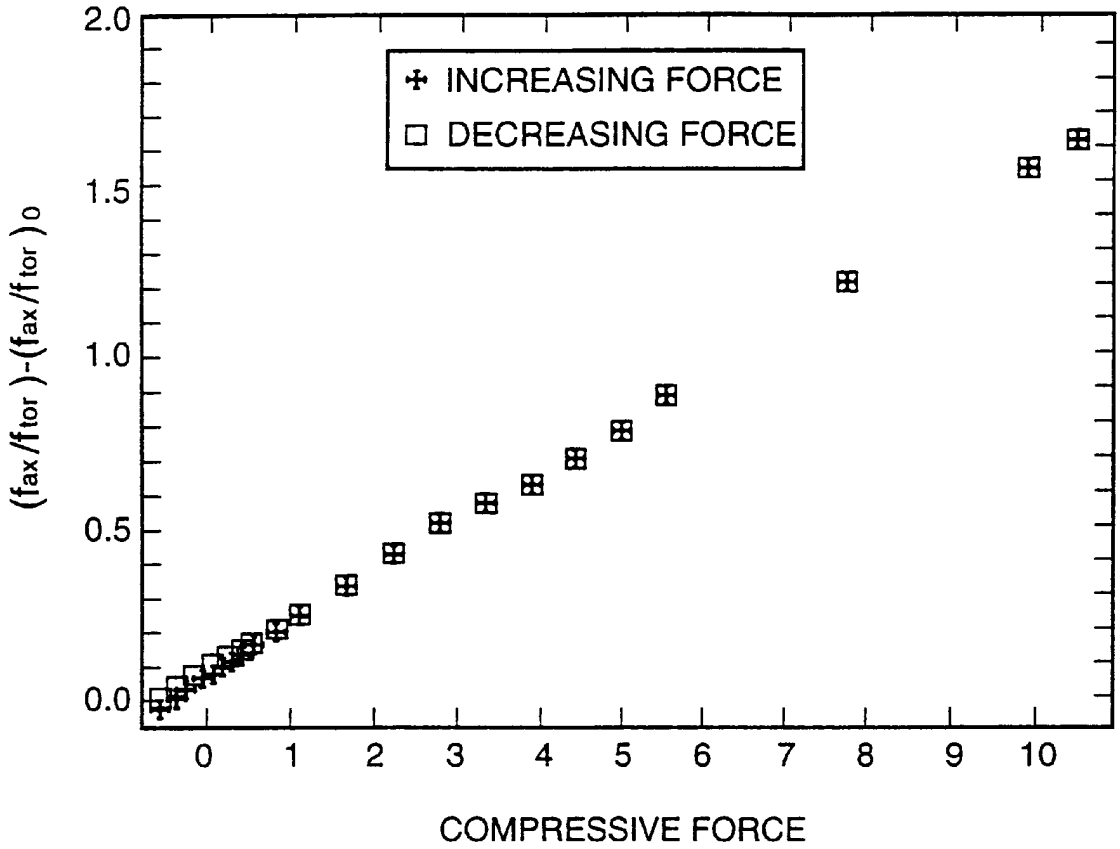
INCREASING FORCE
DECREASING FORCE
2.0
1.5
1.0
0.5
0.0
0
1
2
3
4
5
6
7
8
9
10
COMPRESSIVE FORCE
(fax/ftor)-(fax/ftor)0

Fig. 15

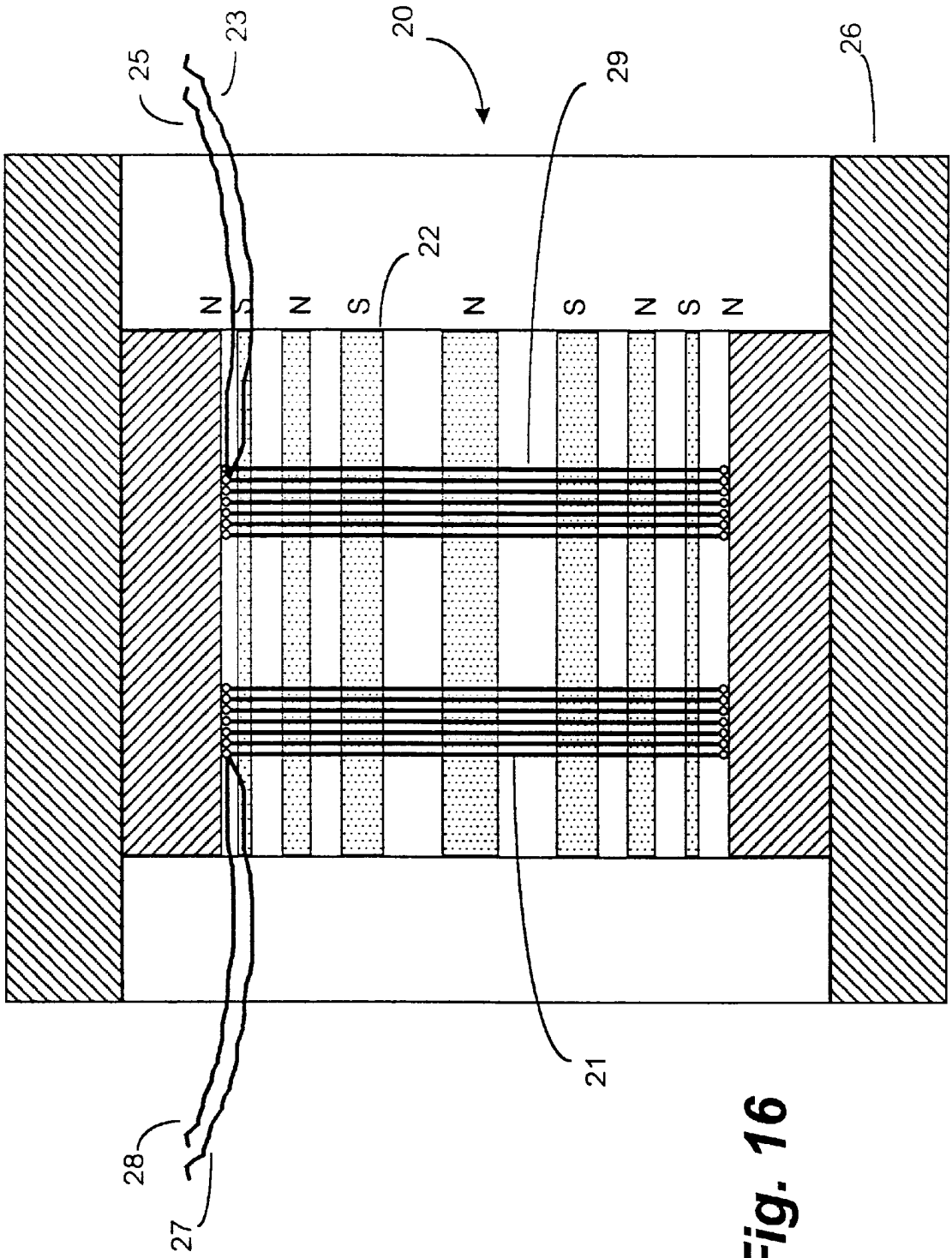

Fig. 16

ELECTROMAGNETIC ACOUSTIC TRANSDUCER AND METHODS OF DETERMINING PHYSICAL PROPERTIES OF CYLINDRICAL BODIES USING AN ELECTROMAGNETIC ACOUSTIC TRANSDUCER

RELATED APPLICATIONS

This is a continuation of application Ser. No. 08/285,018, filed on Aug. 2, 1994 and now issued as U.S. Pat. No. 5,895,856 and a continuation of copending U.S. patent application Ser. No. 09/157,082, filed Sep. 18, 1998 both having the same inventors as this invention.

BACKGROUND

1. Field of the Invention

The invention relates to electromagnetic acoustic transducers usable with cylindrical objects, and methods for determining resonant frequencies and physical properties of cylindrical objects using electromagnetic acoustic transducers.

2. Summary of the Invention

The invention is directed to an electromagnetic acoustic transducer (hereinafter "EMAT") adapted for use with cylindrical objects, and to methods for using an EMAT to determine the resonant frequencies and physical properties of a cylindrical object. "Cylindrical object" is used to denote a body having a cylindrical shape with an approximately circular cross section. The term cylindrical body includes solid cylindrical bodies and hollow cylindrical bodies such as pipes and tubes.

The EMAT of this invention includes a housing having a circular opening, a plurality of magnets mounted in the housing at evenly spaced intervals around the circular opening, and at least one wire coil mounted in the housing adjacent the circular opening and the polar ends of the plurality of magnets. Applying an electrical excitation signal to a wire coil of the EMAT will excite vibrations in a cylindrical object inserted into the housing of the EMAT. When the excitation signal is at a resonant frequency of the cylindrical object, the cylindrical object resonates, i.e., the forces applied to the cylindrical body by the EMAT constructively interfere with the natural vibrations of the cylindrical body, and large amplitude vibrations are produced. Once the cylindrical object is vibrating, the EMAT of this invention is also able to sense the amplitude and frequency of the vibrations in the cylindrical object.

The EMAT of this invention excites very specific types of vibrational motion in the cylindrical object inserted into the circular opening. Depending on the orientation of the wire coil relative to the magnets and the cylindrical object the EMAT can induce axial shear vibrations, torsional vibrations, radial vibrations or plain strain vibrations.

The EMAT of this invention is also useful in determining the frequencies at which a cylindrical object experiences resonant vibrations in each of the above identified types of vibrational motion. In addition, various physical properties of the cylindrical object, or the loading applied to the cylindrical object can be determined by:

(1) determining the amount of time it takes for resonant vibrations in the cylindrical body to decrease to a negligible value;

(2) comparing resonant frequencies of the cylindrical object to resonant frequencies of a standardized cylindrical object made from the same material and having approximately the same dimensions;

(3) determining how the resonant frequencies of several types of vibrational motion change as a load is applied to the cylindrical object; and

(4) determining how the amplitude of resonant vibrations change as the object is rotated within in the EMAT.

In particular, this invention provides a non-contact type EMAT usable with cylindrical objects.

This invention also provides an EMAT capable of exciting specific types of vibrational motion in the cylindrical object.

This invention further provides an EMAT capable of exciting axial shear vibrations, torsional vibrations, radial vibrations, or plain strain vibrations in a cylindrical object.

This invention provides a method for using an EMAT to determine the resonant frequencies of a cylindrical object.

This invention also provides a method for using an EMAT to determine the resonant frequency or a cylindrical object for axial shear vibrations, torsional vibrations, radial vibrations, or plain strain mode vibrations.

This invention further provides methods for using an EMAT to measuring physical properties of cylindrical objects.

This invention further provides a method for using an EMAT to determine the radial depth from the exterior surface of a cylindrical object at which physical properties of the material of the cylindrical object undergo a change.

This invention also provides a method for using an EMAT to determine the magnitude of a load placed on a cylindrical object.

This invention further provides a method for using an EMAT to determine the texture or grain orientation of the material forming a cylindrical object.

These and other objects and advantages of the present invention will become apparent from the following detailed description of preferred embodiments when taken in conjunction with the accompanying drawings.

3. BRIEF DESCRIPTION OF THE DRAWINGS

The invention will be described in detail with the reference to the following figures wherein like elements bear like reference numerals and wherein:

FIG. **1** is a sectional view of an electromagnetic acoustic transducer for exciting torsional vibrations in a cylindrical object;

FIG. **2** is a sectional view of an electromagnetic acoustic transducer for exciting axial shear vibrations in a cylindrical object;

FIG. **3** is a sectional view of an electromagnetic acoustic transducer for exciting radial vibrations in a cylindrical object;

FIG. **4** is a block diagram of a first test apparatus for determining the resonant frequency of a cylindrical object using an electromagnetic acoustic transducer;

FIG. **5** is a block diagram of a second test apparatus for determining the resonant frequency of a cylindrical object using an electromagnetic acoustic transducer;

FIG. **6** is a chart showing the amplitude of vibrations in a cylindrical object over a period of time;

FIG. **7** is a chart showing the amplitude of vibrations of a cylindrical object at different frequencies;

FIG. **8** is a chart showing the real and imaginary parts of the impedance of a wire coil of an electromagnetic acoustic transducer at various frequencies;

FIGS. **9A–9D** are diagrams showing the displacement of a cross-section of a cylindrical object undergoing resonant axial shear vibrations;

FIG. **10** is a chart showing the relationship between case hardening depth and the resonant frequency of a cylindrical object;

FIG. **11** is a chart showing the ratio between the resonant frequency for a case hardened cylindrical object to the resonant frequency of an unhardened cylindrical object for different resonant frequencies;

FIG. **12** is a chart showing the relationship between case hardening depth of a cylindrical object and the average of the ratios shown in FIG. **10**;

FIG. **13** is a chart showing the relationship between the resonant axial shear frequency and the magnitude of an axial load placed on a cylindrical object;

FIG. **14** is a chart showing the relationship between the resonant torsional frequency and the magnitude of an axial load placed on a cylindrical object;

FIG. **15** is a chart showing the relationship between the ratio of the resonant axial shear frequency to the resonant torsional frequency and the magnitude of an axial load applied to a cylindrical object; and

FIG. **16** is a cross-section of an electromagnetic acoustic transducer according to the present invention having two wire coils.

4. DETAILED DESCRIPTION OF THE PREFERRED EMBODIMENTS

FIG. **1** shows a first type of EMAT **100** capable of exciting torsional vibrations in a cylindrical object **200**. The EMAT **100** comprises a housing **26** having a circular opening **20**. A cylindrical object **200** is inserted into the circular opening **20**. The cylindrical object **200** shown in FIG. **1** extends into and out of the page.

A plurality of magnets **22** are mounted in the housing **26** around the circular opening **20** at evenly spaced intervals. The polar ends **22***a* and **22***b* of the magnets **22** are adjacent the circular opening, and each part of adjacent magnets **22** has ends **22***a* and **22***b* of opposite polarity. The EMAT **100** also has at least one wire coil **24** which is also mounted in the housing **26** adjacent the circular opening **20**. In this first type of EMAT **100**, the individual wires **24***a* of the wire coil **24** are mounted adjacent to the polar ends **22***a* and **22***b* of the plurality of magnets **22**, and are arranged in a meander pattern wherein the wires **24***a* extend back and forth through the circular opening **20** along the axial direction of the cylindrical object **200** (i.e. into and out of the page). The wires having an X in the center are extending out of the page, and the wires with a dot in the center are extending into the page.

Any type of cylindrical object **200** comprising an electrically conductive material can be used with the EMAT **100**. As mentioned above, the cylindrical object **200** can be solid or hollow. When an electrical excitation signal is applied to the wire coil **24** a current begins to flow through the wires **24***a*. Because the wires **24***a* are located in the magnetic fields of the magnets **22**, and because the cylindrical object **200** is also located adjacent the wire coil **24**, eddy currents are induced in the cylindrical object **200**. If the EMAT **100** is held in a fixed position the eddy currents in the cylindrical object **200**, which are also in the presence of the magnetic field, create Lorentz forces that apply a force to the material of the cylindrical object **200** in a certain direction.

Because the current runs in a first direction through the wires **24***a* adjacent the north ends **22***a* of the plurality of magnets **22**, and the current runs in an opposite direction in the wires **24***a* adjacent the south ends **22***b* of the plurality of magnets **22**, the Lorentz forces resulting from the application of a voltage to the wire coil **24** will always be oriented in the same direction. For the configuration shown in FIG. **1**, the Lorentz forces will cause a torsional force twisting the cylindrical object **200** in a rotational direction.

If the electrical excitation signal applied to the wire coil **24** is an alternating current, the Lorentz forces applied to the cylindrical object **200** will also alternate. As a result, the cylindrical object **200** will first twist in one direction, then twist in the opposite direction as the current alternates. If the frequency of the alternating excitation signal applied to the wire coil **24** matches a resonant torsional vibrational frequency of the cylindrical object **200**, the torsional forces applied by the EMAT **100** will constructively interfere with the vibrational movement of the cylindrical object **200**, and the cylindrical object **200** will resonate.

FIG. **2** shows a second type of EMAT **100** capable of exciting axial shear vibrations in the cylindrical object **200**. As in the first type of EMAT **100** described above, the wire coil **24** of the second type of EMAT **100** is also mounted adjacent the circular opening **20** in the housing **26**. In this second type of EMAT **100**, however, the wire coil **24** is wound around the circular opening **20** in the form of a solenoid coil. Applying an electrical excitation signal to the wire coil **24** will cause Lorentz forces in the cylindrical object **200** that are oriented in the axial direction of the cylindrical object **200**. In other words, the forces will be directed into and out of the page.

Because the current always runs in the same direction relative to the cylindrical object **200**, and because the wire coil **24** passes next to alternating poles **22***a* and **22***b* of the plurality of magnets **22**, the current causes alternating direction Lorentz in the cylindrical object **200**. When the current is flowing through the wire coil **24** in a first direction, the Lorentz force adjacent a south end **22***b* of a magnet **22** will be directed out of the page and the Lorentz force adjacent a north end **22***a* of a magnet **22** will be directed into the page. When the direction of the current flowing through the wire **24** is reversed, the Lorentz forces will also reverse. Applying an alternating current to the wire coil **24** will create alternating axial Lorentz forces in the cylindrical object **200**. By adjusting the frequency of the electrical excitation signal applied to the wire coil **24**, the cylindrical object **200** can be induced to vibrate at a resonant frequency for axial shear vibrations.

FIG. **16** shows an axial cross-sectional view of the second type of EMAT **100**. The EMAT **100** has a hollow cylindrical housing **26**, in which the plurality of magnets **22** are mounted. The plurality of magnets **22** are mounted at evenly spaced intervals around the inside of the cylindrical housing **26** so that a cylindrical opening **20** extends through the longitudinal axis of the EMAT **100**. The EMAT **100** has two wire coils **21** and **29** which are mounted in the EMAT **100** adjacent the polar ends **22***a* and **22***b* of the plurality of magnets **22**. The wire coils **21** and **29** form a circle around the cylindrical opening **20** in the center of the EMAT **100**. The first wire coil **21** has a first end **27** and a second end **28**. The second wire coil **29** has a first end **25** and a second end **23**.

FIG. **3** shows a third type of EMAT **100** capable of inducing radial vibrations in the cylindrical object **200**. In this third type of EMAT **100**, the wire **24***a* of the wire coil **24** are located between adjacent ends **22***a* and **22***b* of adjacent magnets **22**, and the wire coil **24** is disposed in a meander pattern extending into and out of the page as described above for the first type of EMAT **100**. A voltage

applied to the wire coil **24** will create Lorentz forces in the cylindrical object **200** which tend to pull the material of the cylindrical object **200** outward in a radial direction or push the material of the cylindrical object inward in a radial direction. Because a current passing through the wire coil **24** will run in a first direction for wires having a north pole **22***a* of a magnet **22** on the left and a south pole **22***b* of a magnet **22** In the right and because the current will run in the opposite direction for wires having a south pole **22***b* of a magnet **22** on the left and a north pole **22***a* of a magnet **22** on the right, the Lorentz forces applied to the cylindrical object **200** by the wires **24***a* of the wire coil **24** will always be oriented in the same radial direction (either into the center, or away from the center). Applying a current running in a first direction through the wire coil **24** will create Lorentz forces tending to pull the cylindrical object **200** outward in a radial direction. Reversing the current will cause the Lorentz forces to reverse, tending to push the cylindrical object **200** inward toward the central axis of the cylindrical object **200**. Applying an alternating current to the wire coil **24** will cause alternating Lorentz forces which pull outward in the radial direction, then push inward in the radial direction. The frequency of an alternating current excitation signal applied to the wire coil **24** can be adjusted so that the cylindrical object **200** vibrates at a resonant frequency.

Each of the EMATs **100** described above excite specific types of vibrational motion in the cylindrical object **200**. In each case, the actual vibrations caused by the EMATs **100** are only approximate. In other words, the first type of EMAT **100** described above is intended to produce only torsional vibrations. In practice the vibrations are not strictly limited to torsional motion. The vibrations are, however, close enough to pure torsional vibrations that they can be modeled as torsional vibrations for the purposes of analyzing the properties of the cylindrical object **200**. The same is true for axial shear and radial vibrations for the second and third types of EMATs **100**.

The term "plane strain vibrations" is used to denote vibrations in a cylindrical object which have no axial component. Torsional vibrations and radial vibrations are two variants of plane strain vibrations. Other types of plane strain vibrations are possible and may be useful for determining certain properties of the cylindrical object **200**.

An EMAT **100** as described above can be used to determine the resonant frequencies and the physical properties of the cylindrical object **200** according to the following methods. The EMATs used in the methods described below, however, need not be one of the types described above. In each of the configurations described above, the wire coil **24** and the magnets **22** of the EMAT **100** were mounted in the housing **26** located around the exterior of the cylindrical object **200**. The methods for determining the resonant frequency and the physical properties of the cylindrical object **200** described below are equally applicable to other types of EMATs, such as those designed to be inserted into the center of a hollow tube. The EMATs usable with hollow tubes could have both the wire coil **24** and the magnets **22** located inside the tube, or the magnets **22** could be located on one side of the tubing wall, and the wire coil **24** on the opposite side. The use of the methods described below is not intended to be limited to EMATs having any particular configuration.

FIG. **4** shows a first type of test apparatus for determining a resonant frequency of a cylindrical object. The test apparatus comprises an impedance analyzer **34** attached to the wire coil of an EMAT **30**. The EMAT **30** is attached to a cylindrical object **32**. The EMAT could be one of the first, second or third types shown in FIGS. **1**, **2** and **3**, or any other type of EMAT designed to excite a specific type of vibration in the cylindrical object **32**.

The impedance analyzer **34** applies an alternating current excitation signal to the wire coil of the EMAT **30** to excite a certain type of vibration in the cylindrical object **32**. The vibrations in the cylindrical object **32**, in turn, affect the impedance characteristics of the wire coil of the EMAT **30**. The impedance characteristics of the wire coil of the EMAT **30** can be used to indicate resonant frequencies of the cylindrical object **32**.

If the frequency of the excitation signal applied to the wire coil is gradually increased, as the frequency of the excitation signal passes through a resonant frequency of the cylindrical object **32**, the amplitude of the real and imaginary parts of the impedance of the wire coil will experience local extreme. Depending on the electrical characteristics of the EMAT **30**, the real or imaginary parts of the impedance of the wire coil **24** could experience a maximum or a minimum at the resonant frequency, or the amplitude of the real or imaginary parts of the impedance could experience a maximum just below the resonant frequency, followed by a minimum just above the resonant frequency, tracing out a Z-shape around the resonant frequency. A programmable impedance analyzer **34** can be programmed to gradually vary the frequency of an electrical excitation signal applied to the wire coil of the EMAT **30** and to note those frequencies at which the real or imaginary parts of the impedance experience extreme, thus indicating a resonant frequency of the cylindrical object **32**.

FIG. **8** shows a plot of the real and imaginary parts of the impedance of the wire coil of the EMAT **30** over a portion of the frequency band that includes a resonant frequency. As shown in FIG. **8**, the real part of the impedance of the wire coil, shown as a solid line, experiences a sudden maximum at the resonant frequency. The imaginary part of the impedance, shown as a dotted line, trace a Z-shaped pattern around the resonant frequency.

The test apparatus described above can be used with an EMAT **30** having a single wire coil, or plural wire coils. If the EMAT **30** has a single wire coil, the impedance analyzer **34** applies an electrical excitation signal to the wire coil and senses the impedance of the same wire coil. If the EMAT **30** has first and second wire coils, the impedance analyzer **34** can apply an excitation signal to a first wire coil, and determine an impedance transfer function between the first and second wire coils.

FIG. **5** shows a second type of test apparatus for determining the resonant frequencies of the cylindrical object **32**. In this second type of test apparatus, a frequency generator **36** provides a frequency signal to a gated amplifier **38** and a receiver **40**. The gated amplifier **38** provides an alternating current electrical excitation signal to the wire coil of an EMAT **30**. The receiver **40** is connected to the EMAT **30** and senses an electrical response signal induced in wire coil of the EMAT **30** by vibrations in the cylindrical object **32**. The receiver is also connected to a recording device **42** for recording the response signal, and an oscilloscope **44** for displaying the response signal.

In this second type of test apparatus, an alternating current electrical excitation signal is applied to wire coil of the EMAT **30** to induce vibrations in the cylindrical object **32**. After a period of time the excitation signal is removed from the wire coil and the cylindrical object **32** is allowed to freely vibrate. Vibrations in the cylindrical object **32** will excite an alternating current in wire coil of the EMAT **30** for

the same reasons the excitation signal produced vibrations in the first place. The EMAT **30** is essentially working in reverse.

After the excitation signal is removed from the wire coil, the receiver **40** is used to sense any electrical response signal generated in wire coil of the EMAT **30** by the vibrations of the cylindrical object **32**. When the excitation signal applied to the wire coil of the EMAT **30** by the amplifier **38** is at a non-resonant frequency, the amplitude of the vibrations induced in the cylindrical object **32** will be relatively small, and the amplitude of the response signal will be correspondingly small. When an excitation signal applied to the EMAT **30** by the amplifier **38** is at or near a resonant frequency of the cylindrical object **30**, the amplitude of the vibrations induced in the cylindrical object **32** will be relatively large, and the amplitude of the response signal induced in the EMAT **30** by the vibrations will be corresponding large.

By applying a plurality of excitation signals to the wire coil of the EMAT **30** at different frequencies, and sensing the response signal generated in the EMAT **30** by the vibrations occurring after each excitation, the resonant frequencies of the cylindrical object **32** can be determined. FIG. **7** shows a diagram of the amplitude of the response signal generated in the wire coil of the EMAT **30** by vibrations in the cylindrical object **32** following excitation at different frequencies. The amplitude of the response signal experiences a sharp maximum spike at the resonant frequencies of the cylindrical object.

As in the first test apparatus, the EMAT **30** used in the second test apparatus can have one or more wire coils. If the EMAT **30** has only a single wire coil the electrical excitation signal is applied to the single wire coil by the gated amplifier **38** for a period of time, then the excitation signal is removed and the receiver **40** senses a response signal induced in the wire coil.

Alternately, if the EMAT **30** is provided with first and second wire coils, the Hated amplifier **38** can be connected to the first wire coil, and the receiver **40** can be connected to the second wire coil. In this set up, the gated amplifier **38** applies an excitation signal to the first wire coil for a period of time to induce vibrations in the cylindrical object **32**, then the excitation signal is removed. The receiver **40** is used to sense an response signal in the second wire coil after the excitation signal is removed.

The first and second wire coils can be physically separated. The only requirement is that vibrations excited by the first wire coil travel along the cylindrical body **32** and cause an excitation signal at the second wire coil. In addition, a first EMAT **30** can be used to excite vibrations in the cylindrical body, and a second EMAT **30** can be used to sense vibrations in the cylindrical body. Using two EMATs **30**, one for exciting and one for sensing, is analogous to using a single EMAT having two wire coils. For the purposes of this description and the claims, the two methods are considered equivalents.

FIG. **6** shows the results of a first method for determining physical properties of a cylindrical object using the EMAT **30**. In the first method, an excitation signal is applied to the EMAT **30** to excite the cylindrical object **32** to vibrate at a resonant frequency. The excitation signal is then removed, and the cylindrical object **32** is allowed to vibrate freely. The amplitude of an electrical response signal generated in the wire coil of the EMAT **30** by the resonant vibrations of the cylindrical object **32** is sensed using either of the two test set ups described above.

The amplitude of the response signal will gradually decrease over a period of time as the free vibrations are damped by the material of the cylindrical object **32**. FIG. **6** shows a diagram Of the amplitude of a response signal generated in the EMAT **30** by free vibrations of the cylindrical object **32** over a period of time. The amount of time taken for the amplitude of the response signal to decrease to a negligible value can be used to determine the damping coefficient for the cylindrical object **32**.

The frequencies at which the cylindrical object **32** resonates can also be used to determine the temperature of the cylindrical object **32**. Changes in the temperature affect the frequency at which the cylindrical object **32** resonates. By determining the frequency of resonant vibrations for a particular-sized cylindrical object **32** formed from a particular material at a variety of different temperatures, a chart describing the relationship between temperature and resonant frequency can be constructed. Once the relationship is known, determining the resonant frequency will permit the determination of the temperature of the object **32**.

The diameter of the cylindrical object **32** can also be determined using the EMAT **30**. As described above for temperature, the diameter of the cylindrical object **32** affects its resonant frequency. For similarly-sized cylindrical object **32** formed from the same material, a slight change in the diameter will result in a slight change in the resonant frequencies. By determining the resonant frequencies of different diameter cylindrical objects **32** at a particular temperature, the relationship between the diameter and the resonant frequency at that temperature can be determined. Once the relationship is known, determining the resonant frequency of the cylindrical object **32** allows one to determine the diameter.

Likewise, the same method can be used to determine the relationship between resonant frequency and the wall thickness of tubing or piping. Once the relationship is known, determining the resonant frequency allows one to determine the wall thickness of the tubing or piping.

The number of magnets **22** used in the EMAT **30** to produce torsional vibrations or radial vibrations does not affect the frequencies at which the cylindrical object **32** resonates. These types of EMATs **30** are designed so that the forces applied to the cylindrical object **32** are relatively uniform around the circumference of the cylindrical object **32**. What is important for these types of EMATs **30** is that enough magnets **22** are provided to apply a uniform force around the circumference of the cylindrical object **32**.

However, the number of magnets **22** used in the EMAT **30** to induce axial shear vibrations (as described above for FIG. **2**) does have an affect on the frequencies at which the cylindrical body **32** resonates. For a particular axial shear type EMAT **30**, several different excitation frequencies will produce resonant vibrations in the cylindrical object **32**.

FIG. **9**A shows a cross-section of the cylindrical object **32** resonating at a first resonant frequency. Each wave peak of the diagram could be located adjacent the north pole **22***a* of a magnet, and each wave trough of the diagram could be located adjacent the south pole **226** of a magnet **22**. At the resonant frequency, the Lorentz forces constructively interfere with the natural vibrations of the cylindrical object **32** to produce the standing waves shown in FIG. **9**A. Changing the number of magnets **22** alters the number of peaks and troughs of the standing waves, thus altering the frequency of the resonant vibration.

FIG. **9**A represents the wave pattern in the material of the cylindrical object **32** when it is resonating at a first resonant frequency. FIG. **9**B represents the wave pattern of the material of the cylindrical object **32** at a second, higher,

resonant frequency. Likewise, FIGS. **9**C and **9**D represent the wave pattern in the material of the cylindrical object **32** at additional higher resonant frequencies. As shown in FIGS. **9**A–**9**D, the higher the resonant frequency, the deeper towards the center of the cylindrical object **32** the vibrations penetrate. Because the depth of penetration of the vibrations varies for different resonant frequencies, the axial shear mode resonant frequencies can be used to measure the depth at which physical properties of the cylindrical object **32** undergo a change.

As in the method of temperature determination described above, for a cylindrical object **32** formed from a particular size and material, changing the physical properties of the material will change the resonant frequencies of the cylindrical object **32**. Because axial shear vibrations penetrate to varying radial depths, the change in axial shear frequency of the cylindrical object **32** can be exploited to determine the radial depth at which the material properties change.

Methods used to determine the case hardening depth of a cylindrical object are described in reference to the FIGS. **10**, **11**, and **12**.

In a first method, the EMAT **30** was used to determine a single resonant frequency for axial shear vibrations for a plurality of different cylindrical objects **32**. Each of the plurality of cylindrical objects **32** had similar dimensions and were formed from the same material. The case hardening depth, however, was different for each cylindrical object **32**. FIG. **10** shows the change in the resonant frequency for different case hardening depths. Once a chart as in FIG. **10** is constructed, determining the resonant frequency of the cylindrical object **32** permits determination of the case hardening depth.

A second method for determining the case hardening depth is described in reference to FIGS. **11** and **12**. In the second method, the EMAT **30** is used to determine a plurality of frequencies at which a first isotropic cylindrical object **32** (i.e. an object having homogeneous physical properties throughout the object) having no case hardening experiences resonant axial shear vibrations. Next, six cylindrical objects formed from the same material and having nearly identical dimensions were tested to determine the frequencies at which they experienced resonant vibrations. Each of the six cylindrical objects had been case hardened to a different radial depth. Because the case hardening altered the physical properties of each of the cylindrical objects, each cylindrical object **32** had different resonant frequencies for axial shear vibrations.

Next, for each of the cylindrical objects **32**, ratios were calculated for each resonant axial shear mode. The ratios represented the change in a resonant frequency between the isotropic object and the hardened object, divided by the resonant frequency of the isotropic object. The ratios were then plotted as shown in FIG. **11**. Finally, an average was calculated for each hardened cylindrical object representing the average of the ratios shown in FIG. **11**. The average of the ratio values are plotted as shown in FIG. **12**. As shown in FIG. **12**, the average ratio values generally correspond to a straight line representing the relationship between case hardening depth and the average of the frequency shift ratios.

The above-described methods can be used to develop charts, as shown in FIGS. **10** and **12**, for any set of cylindrical objects **32** having a variation in the physical properties of the material as a function of the radial depth. In addition, the same basic methods could be used to map the value or a physical material property as a function of radial penetration depth for a single cylindrical object **32**. For instance, measuring the various axial shear resonant frequencies of the cylindrical object **32** with the EMAT **30** permits mapping the elastic constant of the cylindrical object **32** as a function of radial depth.

Methods for determining the loading applied to the cylindrical object **32** using the EMATs **30** are described in reference to FIGS. **13**–**15**. The loading could be an axially compressive or tensile load, or in the case of tubes, the loading could be a pressure applied to the interior of the tube.

As in the method for temperature determination, the amount of loading applied to the cylindrical object **32**, affects the frequency at which it experiences resonant vibrations. The simplest way to determine the magnitude of loading applied to the cylindrical object **32** is to use the EMAT **30** to determine the resonant frequencies of the cylindrical object **32** at various different magnitudes of loading. First, the EMAT **30** is used to determine a resonant frequency of the cylindrical object **30** when no loading is applied. A first load is then applied to the cylindrical object and the EMAT **30** is used to determine the new resonant axial shear frequency. This process is repeated for a number of different loads to determine the resonant frequencies at each load.

The test data is then used to prepare a chart showing the relationship between the magnitude of the load and the resonant frequency. FIG. **13** shows the relationship between a resonant axial shear frequency of the cylindrical object **32** and a compressive load applied to the cylindrical object **32**. FIG. **14** shows the relationship between a resonant torsional frequency of the cylindrical object **32** for the same range of compressive forces. Once these charts have been constructed one can use the EMAT **30** to determine the resonant frequency. The chart is then used to determine the magnitude of the load.

Unfortunately, temperature has a great affect on the resonant frequency of the cylindrical object J2. The resonant frequencies plotted in FIGS. **13** and **14** were measured concurrently by two different EMATs **30** as a compressive load applied to the cylindrical object **32** was sequentially increased (black dots), then sequentially decreased (hollow squares). The sudden jump in the resonant frequencies for both axial shear and torsional vibration between 3 and 4 kN that occurred when the forces were being increased (the black dots) is the result of a small (a few degrees Celsius) temperature change in the testing room between measurements.

Because of the affect of temperature on the resonant frequencies, the charts shown in FIGS. **13** and **14** are only useful for a relatively narrow temperature range. To determine the loading with an acceptable level of accuracy using a single resonant frequency chart, as shown in FIGS. **13** or **14**, the original testing done to create the charts, and the actual test of the loading, must be performed at the same temperature.

A second method for determining the load, however, accounts for temperature variations. In this method, an unloaded cylindrical object is first tested to determine a particular resonant axial shear frequency and a particular resonant torsional frequency. Next, measurements of the resonant frequencies are taken for a number of different magnitudes of load for the two different modes of vibrations. As described above, the charts of FIGS. **13** and **14** will result from the measurements.

Next, a ratio is calculated, representing the resonant axial shear frequency to the resonant torsional frequency for the

cylindrical object **32** with no load applied. Then, a plurality of different ratios are calculated representing the resonant axial shear frequency divided by the resonant torsional frequency for each of the different compressive forces applied to the cylindrical object **32**. A plurality of difference measurements are then calculated representing the difference between the no load ratio, and the each of the loaded ratios.

The ratios are then plotted as shown in FIG. **15**. As shown in FIG. **15**, a relatively straight line will result showing the relationship between the compressive force and the difference between the two ratios. The temperature variation occurring between the 3 and 4 kN measurements does not affect the difference in the ratios. This method can be used to account for temperature variations in determining the magnitude of loading on the cylindrical object **32**, so long as temperature variations affect each type of resonant frequency approximately equally.

Once a plot as shown in FIG. **15** is produced for a particular cylindrical object **32**, the amount of a force applied to the cylindrical object **32** can be determined by measuring the axial shear and torsional resonant frequencies, calculating a ratio between the resonant frequencies, and comparing the calculated ratio to the no load ratio.

As mentioned above, the same method can be used to determine the magnitude of a tensile load applied to the cylindrical object **32**. If the cylindrical object **32** is a hollow tube, this method can also be used to determine a pressure within (or without) the tube.

When a symmetrical EMAT **30** having only two magnets **22** (one on each side of the cylindrical object **32**) is used to determine the resonant frequency of the cylindrical object **32**, at some frequencies ranges, instead of getting a response signal with a single large amplitude spike at a single resonant frequency, two smaller amplitude signals are sensed at two slightly separated resonant frequencies. It is believed that the splitting of the resonant frequencies is due to the grain orientation of the material comprising the cylindrical object **32**. This resonant frequency splitting can be exploited to determine the grain orientation of the material of the cylindrical object **32** using the method described below.

In a first step, the cylindrical object **32** is inserted to the EMAT **30** having two evenly spaced magnets **22**. The cylindrical object **32** is oriented at a first rotational position, and the amplitude of a response signal of the wire coil of the EMAT **30** is recorded for each of two closely spaced resonant frequencies. Next, the cylindrical object **32** is rotated a certain number of degrees and the amplitudes of response signals are again recorded for each of the two split resonant frequencies. This procedure may be repeated for a plurality of different rotational positions of the cylindrical object **32**. By comparing the amplitudes of the response signals at the different rotational positions, the grain orientation of the material which forms the cylindrical object **32** can be determined.

In addition to determining grain orientation, the same basic method can be used to determine variations in the thickness of thin walled tubing around the circumference of the tube. If the amplitudes of the split resonant frequencies remain relatively constant as the tube is rotated in the EMAT **30**, the wall thickness is relatively constant. Variations in the amplitude indicates variations in the wall thickness.

The use of the EMAT **30** having two magnets **22** in the above described method is not essential to the method. All that is required is that the EMAT **30** produce a split resonant frequency response signal.

The texture of the cylindrical object **32** can also be determined by measuring the elastic constant of the cylindrical object **32** for axial shear vibrations and torsional vibrations, and comparing the measurements. The comparison of the elastic constants at various rotational positions will also provide an indication of the grain orientation of the material in the cylindrical object **32**.

Variations in the above-described methods can be used to determine a variety of different physical properties of the cylindrical object **32** using EMATs **30** according to this invention.

While this invention has been described in conjunction with specific embodiments thereof, it is evident that many alternatives, modifications, and variations will be apparent to those skilled in the art. Accordingly, it is intended to embrace all such alternatives, modifications and variations as fall within the spirit and scope of the appended claims.

What is claimed is:

1. An electromagnetic acoustic transducer, comprising:

a housing having a circular opening surrounding an exterior circumferential wall of a cylindrical object inserted into the housing;

a plurality of magnets mounted in the housing and arranged around the circular opening at evenly spaced intervals, each magnet having an end adjacent the circular opening, the ends of adjacent magnets having opposite polarities;

at least one electrically conductive wire coil mounted in the housing adjacent the ends of the plurality of magnets, wherein the at least one wire coil forms a cylindrical shape surrounding the circular opening;

a signal generator connected to the at least one wire coil and supplying an electrical excitation signal to the at least one wire coil to induce vibrations in the cylindrical object; and

a signal detector connected to the at least one wire coil and detecting an electrical response signal induced in the at least one wire coil by vibrations in the cylindrical object.

2. The electromagnetic acoustic transducer of claim **1**, wherein the electrical excitation signal applied to the at least one wire coil induces axial shear vibrations in the cylindrical object.

3. An electromagnetic acoustic transducer, comprising:

a cylindrical object;

a plurality of magnets arranged radially about the cylindrical object at substantially equal intervals, wherein ends of adjacent magnets having opposite polarities; and

a electrically conductive wire coil wound around the cylindrical object in the form of a solenoid coil and radially positioned between the ends of the plurality of magnets and the cylindrical object.

4. The electromagnetic acoustic transducer of claim **3** further comprising:

an electrical excitation signal flowing in the electrically conductive wire coil; and

Lorentz forces induced in the cylindrical object by the electrical excitation signal wherein the Lorentz forces are oriented in the axial direction of the cylindrical object.

5. The electromagnetic acoustic transducer of claim **4**, wherein at any point along an axially oriented line inter-

secting the electrically conductive wire coil the electrical excitation signal comprises a current that at any point in time runs in a single direction relative to the cylindrical object.

6. A transducer comprising:

a cylindrical object;

a first set of magnetic poles arranged about the cylindrical object and having a substantially uniform spacing between adjacent ones of the first set of magnetic poles;

a second set of magnetic poles having an opposite polarity from the first set of magnetic poles arranged about the cylindrical object such that each of the first set of poles is separated by one of the second set of poles;

a conductive loop wherein the center of the loop is aligned with the center of the cylindrical object and the loop is positioned in the space between the first and second sets of poles and the cylindrical object;

an excitation signal flowing in the conductive loop and operable to induce vibrations in the cylindrical object; and

a response signal induced in the conductive loop by the vibrations in the cylindrical object.

7. The transducer of claim **6** wherein the induced vibrations comprise axial shear vibrations.

8. The transducer of claim **6** wherein the induced vibrations are associated with Lorentz forces induced in the cylindrical object by the excitation signal.

9. The transducer of claim **6** wherein the excitation signal comprises a flow of electrical charge in the conductive loop.

10. The transducer of claim **6** wherein the response signal comprises a flow of electrical charge in the conductive loop.

11. The transducer of claim **10** wherein at any point in time the electrical charge flows in a single direction relative to the cylindrical object.

12. The transducer of claim **6** wherein the conductive loop comprises a metal wire wound about the cylindrical object.

13. The transducer of claim **6** wherein the conductive loop comprises a wire coil wound about the cylindrical object in the form of a solenoid coil.

14. The transducer of claim **6** further comprising a signal generator coupled to the conductive loop so as to drive an electrical charge having alternating directions in the conductive loop.

15. The transducer of claim **14** wherein the signal generator comprises an adjustable frequency signal generator.

* * * * *